INSTALLATION INSTRUCTION

P.E. Tank™

Setting Circular Hole on Tank

- Used hole saw, sharp hollow punch or sharp driller to make circular hole.
- Avoid scoring or scratching tank for drill the circular hole.
- Use only plastic, rubber washers and PTFE tapes when connecting and joining pipes andother fitting to the tank
- Do not use putty or any form of jointing compound.

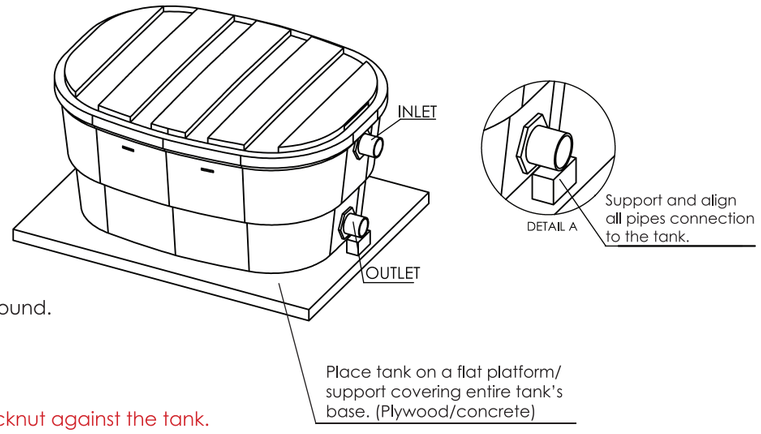

Warning ⚠ : Do not overtigntened the backnut against the tank.

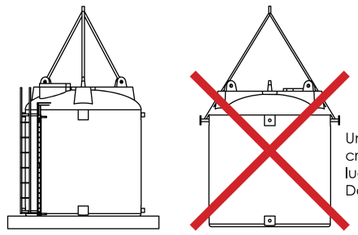

Unload and lift tank using crane and tank's lifting lugs provided.[below diagram] Do not lift with side fitting.

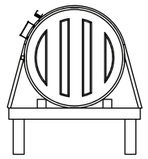

Do After lift / loading using crane on the lorry / low loader ,tank must be safeguarded by wrapping slings around the body of tanks. Strictly NOT on pipes fitting

P.E.Tanks surrounding area should have FENCING to prohibit unauthorised person's to prevent incidents eg. Strike on tanks with hammer, spanner or sharp object.

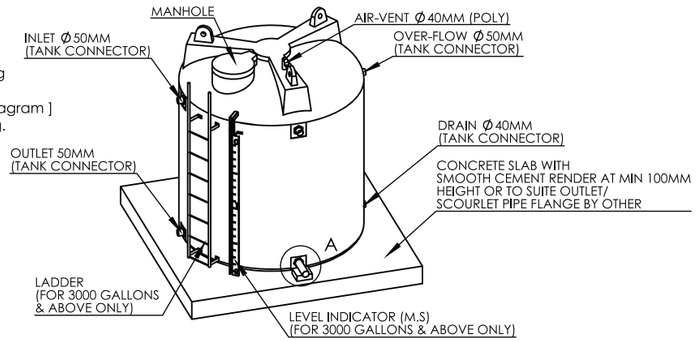

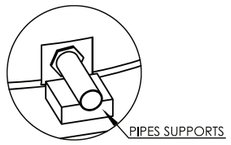

Warning ⚠

- Connecting pipe work not supported with steel or concrete footing may cause leakage.
- Elevated platform shall be free of debris or stone and even surface

Caution ⚠

- Do not placed the tank near a heater electrical light bud or other source of heat.
- Do not lift the tank when filled with liquid/water

WARRANTY TERMS & CONDITIONS FOR CLOSED TOP & OPEN TOP SERIES

(i) 8 years (outdoor) and/ or 10 years (indoor) warranty covers P.E. Tank **MS 1225:PART 1:2007 & MS 1225:PART 2:2006** tanks only.

(ii) We shall not be held responsible for any defects or damages to the tank if above installation instructions are not adhered to.

(iii) Our liability is strictly limited to replacing the water tanks. The company will not be responsible for any consequential loss resulting from the tanks.

(iv) Our P.E. Tanks are used for cold water storing on elevated even surface.

Authorised Distributor:

MUI FATT

Close Top and Open Top Series

P.E. Tank™

LMD POLYETHYLENE WATER TANK

✓ NON-TOXIC ✓ RUST FREE ✓ SEAMLESS

✓ SUN LIGHT RESISTANT ✓ CHEMICALS RESISTANT

BUATAN MALAYSIA
MADE IN MALAYSIA

GOLDEN BULL AWARD 2004

BM TRADA CERTIFICATION
ISO 9001:2008
UKAS QUALITY MANAGEMENT
012

MS 1225 : PART 1 : 2007
MS 1225 : PART 2 : 2006

Mui Fatt Marketing Sdn. Bhd.
www.muifatt.com
Phone: +603-3134-3888 Fax: +603-3134-3889
Email: sales@muifatt.com.my

OPEN TOP SERIES

P.E. Tank™

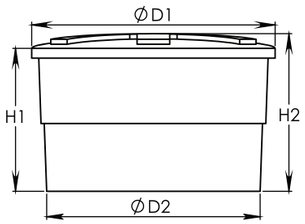

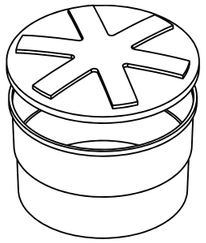

BUMI (OPEN TOP)

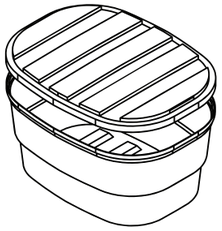

SEGI (OPEN TOP)

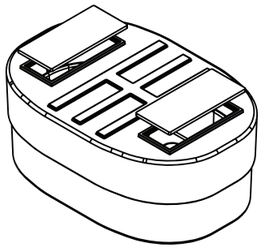

SEGI (CLOSED TOP)

Note:
- All dimension are rounded-off to the nearest 10mm (or 0.5 inch).
- Dimension given above are for space required for installation purpose only.
- The manufacturer reserves the right to amend or change the design, price, patterns and specifications without any prior notice as continuous improvement achieved.

D_1 : Dimension of tank cover
D_2 : Dimension of tank base
H_1 : Height to top of tank
H_2 : Height to top of cover

P.E. Tank™ Properties - Circular Series • *Category:* **BUMI**

Model	Capacity (Gallons)		External Dimensions - mm (inches)				List Price (RM)
	Effective (Gallons)	Nominal (Gallons)	Top (D_1) mm (inches)	Base (D_2) mm (inches)	H_1 mm (inches)	H_2 mm (inches)	
BM 25/50	25	50	940 (37)	813 (32)	356 (14)	457 (18)	110
BM 75	-	75	813 (32)	585 (23)	965 (38)	1067 (42)	140
BM 50/80	50	80	1143 (45)	915 (36)	457 (18)	584 (23)	145
BM 70/100	70	100	1245 (49)	1041 (41)	533 (21)	685 (27)	175
BM 100/150	100	150	1270 (50)	1041 (41)	660 (26)	736 (29)	245
BM 150/200	150	200	1550 (61)	1245 (49)	584 (23)	686 (27)	330
BM 200/250	200	250	1575 (62)	1295 (51)	787 (31)	914 (36)	410
BM 250/300	250	300	1550 (61)	1295 (51)	940 (37)	1067 (42)	490
BM 300/350	300	350	1473 (58)	1194 (47)	1346 (53)	1549 (61)	570
BM 300/400	300	400	1651 (65)	1346 (53)	1092 (43)	1168 (46)	650
BM 400/500	400	500	1753 (69)	1448 (57)	1168 (46)	1321 (52)	820
BM 500/600	500	600	1829 (72)	1524 (60)	1321 (52)	1422 (56)	950

P.E. Tank™ Properties - Square Series • *Category:* **SEGI**

Model	Capacity (Gallons)		External Dimensions - mm (inches)				List Price (RM)
	Effective (Gallons)	Nominal (Gallons)	Top (D_1) mm (inches)	Base (D_2) mm (inches)	H_1 mm (inches)	H_2 mm (inches)	
SG 30	-	30	736 X 508 (29 X 20)	533 X 355 (21 X 14)	381 (15)	406 (16)	105
SG 50	25	50	990 X 965 (39 X 38)	787 X 762 (31 X 30)	330 (13)	355 (14)	130
SG 50/80	50	80	1245 X 1219 (49 X 48)	1041 X 1016 (41 X 40)	356 (14)	457 (18)	175
SG 70/100	70	100	1270 X 1270 (50 X 50)	1067 X 1067 (42 X 42)	457 (18)	588 (21)	195
SG 100/150	100	150	1321 X 1321 (52 X 52)	1092 X 1092 (43 X 43)	559 (22)	660 (26)	290
SG 150/200	150	200	1534 X 1499 (60 X 59)	1219 X 1219 (48 X 48)	609 (24)	686 (27)	385
SG 200/250	200	250	1473 X 1448 (58 X 57)	1194 X 1194 (47 X 47)	787 (31)	838 (33)	480
SG 250/300	250	300	1499 X 1473 (59 X 58)	1219 X 1194 (48 X 47)	965 (38)	1041 (41)	620
SG 300/400	300	400	1524 X 1575 (60 X 62)	1143 X 1143 (45 X 45)	1194 (47)	1270 (50)	730

CLOSED TOP SERIES

P.E. Tank™

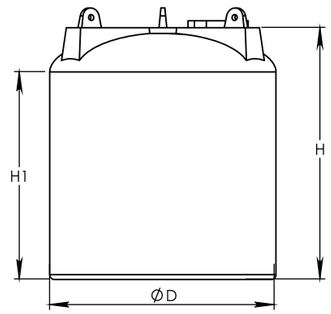

PE-CT-2000-2200

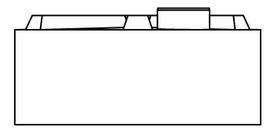

PE-CT-900-1000

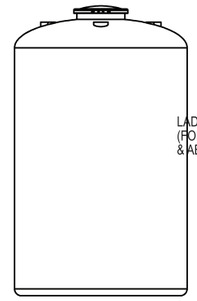

PE-CT-1300-1500

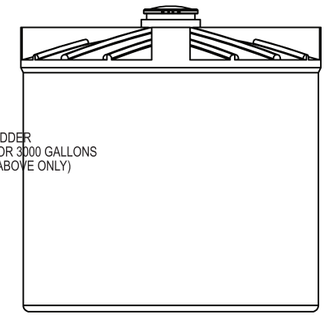

PE-CT-4000-4400

Note:
- All dimension are rounded-off to the nearest 10 mm (or 0.5 inch).
- Only water tanks which 3000 Gallons and above will be supplied with internal/external ladder and level indicator.
- Dimension given above are for space required for installation purposes only.
- The manufacturer reserves the right to amend or change the design, patterns and specifications without any prior notice as continuous improvement achieved.

Polyethylene

Properties	Test Values	Test Methods
Density	938 kg/m^3	ISO 1872/1-1986
Tensile Strength	16 MPa	ISO/R527-1966 : Type 2 Speed D
Elongation	> 200%	ISO/R527-1966 : Type 2 Speed D
Flexural Modulus	650 MPa	ISO 178-1975
Impact Strengh	20 KJ/m^2	ISO 179-1982 : Contion 2C
Hardness (Shore D)	62	ISO 868-1985
Softening Point	117 °C	ISO 306
Thermal Conductivity	0.48 W/m°C	ASTM C117
Melting Point	125 °C	ASTM D2117
Linear Expansion	10×10^{-4}/°C	ASTM D696

Test results supplied by Resin Manufacturer
Manufactured to SIRIM Standard
MS 1225 : PART1 : 2007
MS 1225 : PART2 : 2006

P.E. Tank™ Properties - Circular Closed Top Series

Model	Product Number	Capacity (Gallons)	Dimensions - mm (inches)		
			D	H	H_1
PE 400	PE-CT-400/500	N 400/500	1400 (55)	1500 (59)	1321 (52)
PE 600	PE-CT-600/700	N 600/700	1400 (55)	2160 (85)	1982 (78)
PE 900	PE-CT-900/1000	N 900/1000	2300 (91)	1100 (43)	970 (38)
PE 1000	PE-CT-1000/1200	N 1000/1200	1755 (69)	2180 (86)	1760 (69)
PE 1300	PE-CT-1300/1500	N 1300/1500	1755 (69)	2820 (111)	2390 (94)
PE 1500	PE-CT-1500/1800	N 1500/1800	2300 (91)	2100 (83)	1550 (61)
PE 2000	PE-CT-2000/2200	N 2000/2200	2300 (91)	2660 (105)	2130 (84)
PE 3000	PE-CT-3000/3400 **	N 3000/3400	3000 (118)	2200 (87)	1950 (77)
PE 3000	PE-CT-3000/3500 **	N 3000/3500	2300 (91)	3620 (143)	3160 (125)
PE 4000	PE-CT-4000/4400 **	N 4000/4400	3000 (118)	2850 (112)	2720 (107)

** Note :For 3000Gallon & above Include level indicator, internal & external ladder.