HEXAGON

Delivering Engineered Solutions Globally.

TRUGRID® Corrosion Resistant FRP Cable Ladders and Fittings

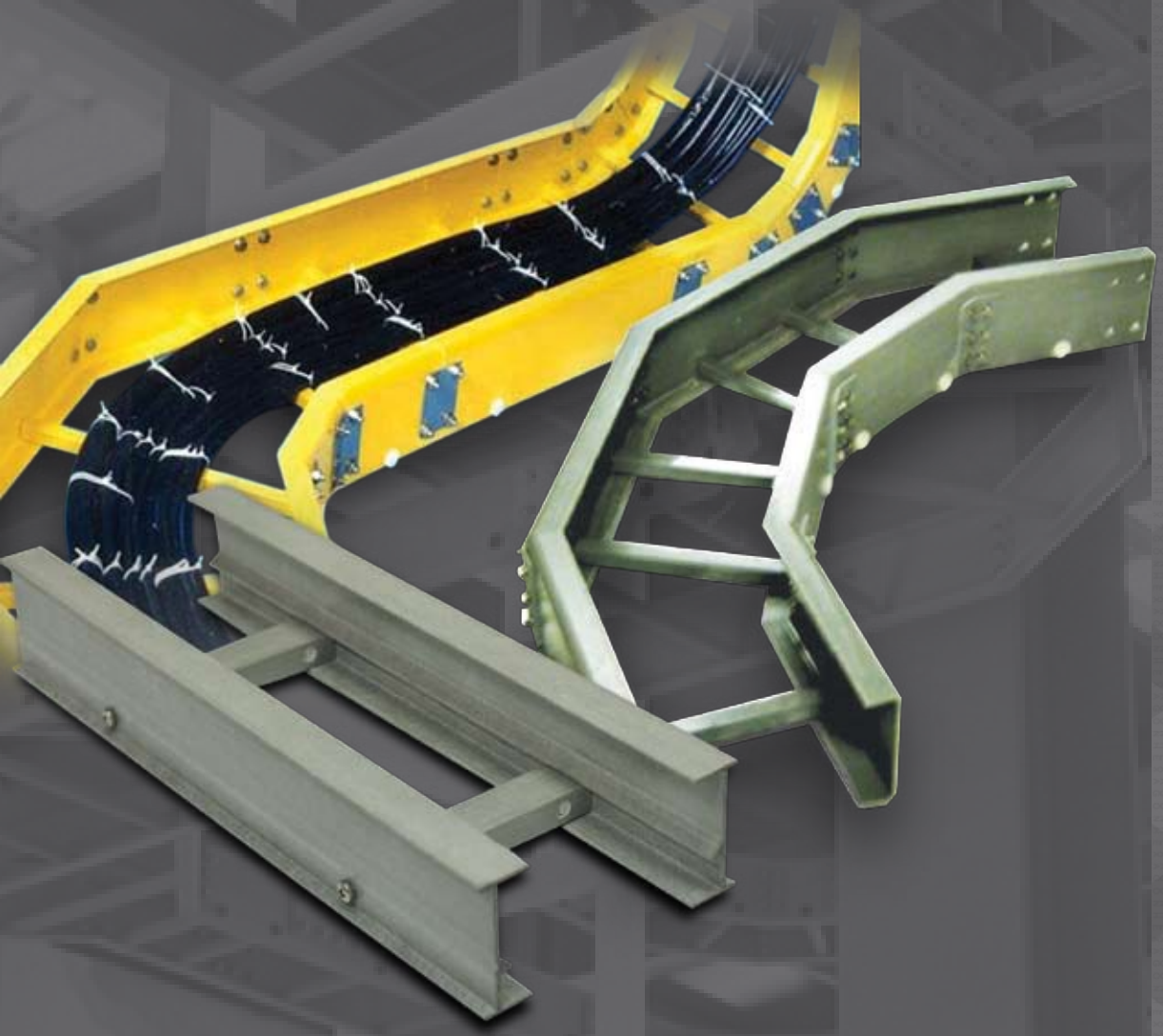

ENGINEERING + DESIGN

MANUFACTURING + DISTRIBUTION

TRADING + SERVICES

CONTENTS

	Page
Company Introduction	1
Quality Control	2
TRUGRID® FRP Cable Support System	3
Chemical Compatibility Guide	4
Material Properties	5
Recommended Support Locations	6
Technical Data	
TRUGRID® FRP Cable Ladders M-Series	7 - 20
TRUGRID® FRP Cable Ladders N-Series	21 - 34

Company Introduction

HEXAGON COMPOSITE SDN. BHD.

The Advance Composite Manufacturer

Fibreglass Reinforced Plastic Composite (FRP) Pultrusion started as a division of Polymer Composite Asia (PCA) in 1989 under Hexagon Holdings Berhad, a Malaysian Public Listed Company with diverse business activities including providing engineering and design services, manufacturing & distribution, and trading & services for industrial purposes.

PCA Pultrusion was specialised in the manufacture of FRP gratings, cable support systems, stair treads, handrails, ladders and structural profile systems from advance composite materials under the brand name of TRUGRID®.

PCA FRP products have been widely supplied to various industries worldwide, such as oil & gas, marine & shipping, power & utilities, petrochemical & chemical, renewable energy, building & construction, etc.

In 2008, PCA Pultrusion went through a corporate transformation and thereafter was known as Hexagon Composite Sdn. Bhd., an independent subsidairy of Hexagon which specialises in manufacturing and supplying FRP pultruded products. The brand TRUGRID® was still adopted and used.

Quality Control

The Quality Control Process

Assures consistent production conformity to product specifications by verifying that:

- Raw materials meet or exceed the required standard specification.
- Processing conforms to established parameters in accordance with developed quality plan.
- Products conform to the required specification.

LESEN PENSIJILAN BARANGAN
Product Certification Licence

HEXAGON COMPOSITE SDN.BHD.
LOT 1903A, JALAN KPB 7
KAWASAN PERINDUSTRIAN KG. BARU BALAKONG
43300 SERI KEMBANGAN
SELANGOR DARUL EHSAN

GLASS REINFORCED PLASTIC OPEN BAR GRATINGS

Please refer to detail in the SCHEDULE

BS 4592 : PART 4 : 1992

SIRM - BS 4592 : PART 4: 1992

CERTIFICATE OF APPROVAL

This is to certify that the Quality Management System of:

Hexagon Composite Sdn. Bhd. (829254-K)
Balakong, Selangor
Malaysia

has been approved by Lloyd's Register Quality Assurance to the following Quality Management System Standards:

ISO 9001:2008
MS ISO 9001:2008

The Quality Management System is applicable to:

Manufacture of Fibre Glass Reinforced Plastic (FRP) products such as gratings, cable ladders & trays, stair treads, handrail, structural profile sections and other FRP products.

Approval Certificate No: KLR 6000948

Original Approval: 25 June 2009
Current Certificate: 25 June 2009
Certificate Expiry: 24 June 2012

Issued by: Lloyd's Register of Shipping (M) Bhd for and on behalf of Lloyd's Register Quality Assurance Ltd.

CERTIFICATE OF APPROVAL

This is to certify that the Quality Management System of:

Hexagon Composite Sdn. Bhd. (829254-K)
Balakong, Selangor
Malaysia

has been approved by Lloyd's Register Quality Assurance to the following Quality Management System Standards:

ISO 9001:2008
MS ISO 9001:2008

The Quality Management System is applicable to:

Manufacture of Fibre Glass Reinforced Plastic (FRP) products such as gratings, cable ladders & trays, stair treads, handrail, structural profile sections and other FRP products.

Approval Certificate No: KLR 6000948

Original Approval: 25 June 2009
Current Certificate: 25 June 2009
Certificate Expiry: 24 June 2012

Issued by: Lloyd's Register of Shipping (M) Bhd for and on behalf of Lloyd's Register Quality Assurance Ltd.

An ISO 9001:2008 certified manufacturer, thus ensuring premium quality and reliable products.

TRUGRID® FRP Cable Support System

The TRUGRID® Cable Support System is designed and manufactured to eliminate the endless problems facedby plant engineers using conventional cable support system made from galvanised steel, aluminium or thermoplastics.

The following are some of the major benefits of the system:

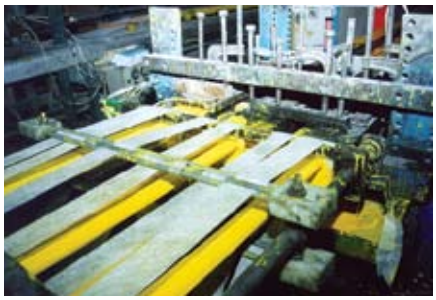

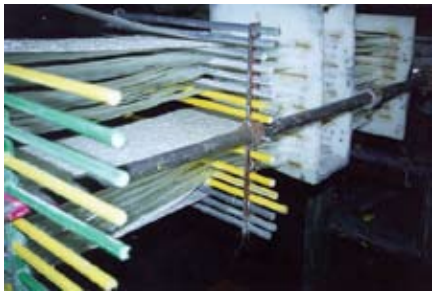

The Pultrusion Process

1. Chemical and Corrossion Resistance

TRUGRID® Cable Support System is made from a selection of premium resin reinforced with glass fibers to form a strong composite which is resistant to most chemicals and Ultra Violet rays. TRUGRID® Cable Support System resists acids, salts, alkalis and a wide range of aggressive chemicals and solvents. This property is not superficial, as in coated steel but integrated throughout the components used. Corrosion often initiates from scratches which are caused while cable are being installed in conventional support systems. However this is not a problem with the use of the TRUGRID® System. Cable trays and Ladders are also available in fire retardant grade.

2. Strength Weight Ratio

TRUGRID® Cable Support System is fabricated from components derived from a process called **pultrusion**. This process enables a high percentage of glass to be incorporated into the components giving it very superior strength. The strength of TRUGRID® System in relation to its weight therefore exceeds the performance of those of steel or aluminium.

3. Ease of Installation

The weight of the pultruded components used is approximately one quarter the weight of steel or two thirds of aluminium.

Unlike stainless steel, pultruded components are easier to handle and can be drilled or cut on site using handtools. Lower installation cost would contribute to substantial savings.

Chemical Compatibility Guide

CHEMICAL ENVIRONMENT	ISO			VINYL ESTER			CHEMICAL ENVIRONMENT	ISO			VINYL ESTER		
		Temp			Temp				Temp			Temp	
	Wt %	ºF	ºC	Wt %	ºF	ºC		Wt %	ºF	ºC	Wt %	ºF	ºC
Acetic Acid	10	190	88	10	210	99	Lactic Acid	SAT	170	77	SAT	200	93
Acetic Acid	50	125	52	50	180	83	Lead Acetate	SAT	170	77	SAT	200	93
Aluminium Chlorine	SAT	170	77	SAT	200	93	Lead Chloride	SAT	140	60	SAT	200	93
Aluminium Hydroxide	SAT	160	71	SAT	170	77	Lead Nitrate	SAT	-	-	SAT	200	93
Aluminium Nitrate	SAT	150	66	SAT	170	77	Linseed Oil	100	150	66	100	190	88
Aluminium Sulfate	SAT	180	82	SAT	200	93	Lithium Chloride	SAT	150	66	SAT	190	88
Ammonium Chloride	SAT	170	77	SAT	190	88	Magnesium Carbonate	SAT	140	60	SAT	170	77
Ammonium Hydroxide	1	100	38	10	150	66	Magnesium Chloride	SAT	170	77	SAT	200	93
Ammonium Hydroxide	28	N/R	N/R	28	100	38	Magnesium Hydroxide	SAT	150	66	SAT	190	88
Ammonium Carbonate	N/R	N/R	N/R	SAT	150	66	Magnesium Nitrate	SAT	140	60	SAT	180	82
Ammonium Bicarbonate	15	125	52	SAT	130	54	Magnesium Sulfate	SAT	170	77	SAT	190	88
Ammonium Nitrate	SAT	160	71	SAT	190	88	Mercuric Chloride	SAT	150	66	SAT	190	88
Ammonium Persulfate	SAT	N/R	N/R	SAT	150	66	Mercurous Chloride	SAT	140	60	SAT	180	82
Ammonium Sulfate	SAT	170	77	SAT	200	93	Mineral Oils	100	170	77	100	200	93
Amyl Alcohol	ALL	N/R	N/R	ALL	90	32	Naptha	100	140	60	100	170	77
Amyl Alcohol Vapor	-	140	60	-	120	49	Nickel Chloride	SAT	170	77	SAT	200	93
Benzene Sulfonic Acid	25	110	43	SAT	200	93	Nickel Nitrate	SAT	170	77	SAT	200	93
Benzoic Acid	SAT	150	66	SAT	200	93	Nickel Sulfate	SAT	170	77	SAT	200	93
Benzoly Alcohol	100	N/R	N/R	100	N/R	N/R	Nitric Acid	5	140	60	5	150	66
Borax	SAT	170	77	SAT	200	93	Nitric Acid	20	70	21	20	100	38
Calcium Carbonate	SAT	170	77	SAT	200	93	Oleic Acid	100	170	77	100	190	88
Calcium Chloride	SAT	170	77	SAT	200	93	Oxalic Acid	ALL	75	24	ALL	200	93
Calcium Hydroxide	25	70	21	25	165	74	Paper Mill Liquors	-	100	38	-	120	49
Calcium Nitrate	SAT	180	82	SAT	200	93	Perchlorethylene	100	N/R	N/R	100	80	27
Calcium Sulfate	SAT	180	82	SAT	200	93	Perchloric Acid	N/R	N/R	N/R	10	150	66
Carbon Disulfide	N/R	N/R	N/R	N/R	N/R	N/R	Perchloric Acid	N/R	N/R	N/R	30	80	27
Carbonic Acid	SAT	130	54	SAT	180	82	Phosphoric Acid	10	160	71	10	200	93
Carbon Dioxide Gas	-	200	93	-	200	93	Phosphonic Acid	100	120	49	100	200	93
Carbon Monoxide Gas	-	200	93	-	200	93	Potassium Aluminium Sulfate	SAT	170	77	SAT	200	93
Carton Tetrachloride	N/R	N/R	N/R	100	75	24	Potassium Bicarbonate	50	80	27	50	140	60
Chlorine, Dry Gas	-	140	60	-	170	77	Potassium Carbonate	10	N/R	N/R	10	120	49
Chlorine, Wet Gas	-	N/R	N/R	-	N/R	N/R	Potassium Chloride	SAT	170	77	SAT	200	93
Chlorine Water	SAT	N/R	N/R	SAT	90	32	Potassium Dichromate	SAT	170	77	SAT	200	93
Chromic Acid	5	70	21	10	120	49	Potassium Hydroxide	N/R	N/R	N/R	25	150	66
Citric Acid	SAT	170	77	SAT	200	93	Potassium Nitrate	SAT	170	77	SAT	200	93
Copper Chloride	SAT	170	77	SAT	200	93	Potassium Permangante	SAT	75	24	SAT	200	93
Copper Cyanide	SAT	170	77	SAT	200	93	Potassium Sulfate	SAT	170	77	SAT	200	93
Copper Nitrate	SAT	170	77	SAT	200	93	Propylene Glycol	ALL	170	77	ALL	200	93
Crude Oil, Sour	100	170	77	100	200	93	Phthalic Acid	-	-	-	SAT	200	93
Cyclohexane, Vapor	ALL	100	38	ALL	130	54	Sodium Acetate	SAT	160	71	SAT	200	93
Diesel Fuel	100	160	71	100	180	82	Sodium Benzoate	SAT	170	77	SAT	200	93
Diethyl Ether	N/R	N/R	N/R	N/R	N/R	N/R	Sodium Bicarbonate	SAT	160	71	SAT	175	79
Dimethyl Phthalate	N/R	N/R	N/R	100	80	27	Sodium Bisulfate	ALL	170	77	ALL	200	93
Ethanol	50	75	24	50	90	32	Sodium Bromide	ALL	170	77	ALL	200	93
Ethyl Acetate	N/R	N/R	N/R	N/R	N/R	N/R	Sodium Carbonate	10	80	27	35	160	71
Ethylene Chloride	N/R	N/R	N/R	N/R	N/R	N/R	Sodium Chloride	SAT	170	77	SAT	200	93
Ethylene Glycol	100	90	32	100	200	93	Sodium Cyanide	SAT	170	77	SAT	200	93
Fatty Acids	SAT	180	82	SAT	200	93	Sodium Hydroxide	N/R	N/R	N/R	10	150	66
Ferric Chloride	SAT	170	77	SAT	200	93	Sodium Hydroxide	N/R	N/R	N/R	25	80	27
Ferric Nitrate	SAT	170	77	SAT	200	93	Sodium Hypochlorite	N/R	N/R	N/R	10	150	66
Ferric Sulfate	SAT	170	77	SAT	200	93	Sodium Monophosphate	SAT	170	77	SAT	200	93
Ferrous Chloride	SAT	170	77	SAT	200	93	Sodium Nitrate	SAT	170	77	SAT	200	93
Fluoboric Acid	N/R	N/R	N/R	SAT	165	74	Sodium Sulfate	SAT	170	77	SAT	200	93
Fluosilicic Acid	N/R	N/R	N/R	SAT	75	24	Sodium Thiosulfate	ALL	100	38	ALL	120	49
Formaldehyde	50	75	24	50	100	38	Stannic Chloride	SAT	160	71	SAT	190	88
Formic Acid	N/R	N/R	N/R	50	100	38	Sulfated Detergent	0/50	170	77	0/50	200	93
Gasoline	100	80	27	100	150	66	Sulfur Dioxide	100	80	27	100	200	93
Glucose	100	170	77	100	200	93	Sulfur Trioxide	100	80	77	100	200	93
Glycerine	100	150	66	100	200	93	Sulfuric Acid	93	N/R	N/R	93	N/R	N/R
Heptane	100	110	43	100	120	49	Sulfuric Acid	50	N/R	N/R	50	175	79
Hexane	100	90	32	100	130	54	Sulfuric Acid	25	75	24	25	190	88
Hydrobromic Acid	50	120	49	50	120	48	Sulfurous Acid	SAT	80	27	N/R	N/R	N/R
Hydrochloric Acid	10	150	66	10	200	93	Tartaric Acid	SAT	170	77	SAT	200	93
Hydrochloric Acid	20	140	60	20	190	88	Tetrachloroethylene	N/R	N/R	N/R	N/R	N/R	N/R
Hydrochloric Acid	37	75	24	37	95	35	Toluene	N/R	N/R	N/R	N/R	N/R	N/R
Hydrofluoric Acid	N/R	N/R	N/R	15	80	27	Trisodium Phosphate	N/R	N/R	N/R	SAT	175	79
Hydrogen Bromide, Dry	100	190	88	100	200	93	Urea	SAT	130	54	SAT	140	60
Hydrogen Bromide, Wet	100	75	24	100	130	54	Vinegar	100	170	77	100	200	93
Hydrogen Chloride	-	120	49	-	200	93	Water, Distilled	100	170	77	100	190	88
Hydrogen Peroxide	30	N/R	N/R	30	80	27	Water, Tap	100	170	77	100	190	88
Hydrogen Sulfide, Dry	-	140	60	ALL	180	82	Water, Sea	-	170	77	-	190	88
Hydrogen Sulfide, Wet	FUM	140	60	FUM	180	82	Zinc Chloride	SAT	170	77	SAT	200	93
Hypochlorous Acid	10	70	21	20	100	38	Zinc Nitrate	SAT	170	77	SAT	200	93
Isopropyl Alcohol	N/R	N/R	N/R	15	80	27	Zinc Sulfate	SAT	170	77	SAT	200	93
Kerosene	100	140	60	100	180	82							

Abbreviations:

SAT - Saturated Solution **-** No Information **N/R** - Not Recommended **FUM** - Fumes

The above chart serves as a guide only. For specific applications, please contact our Technical Sales Service Department.

Material Properties

Typical Properties of pultruded fiberglass structural shapes (Except of Solid Rods)

Mechanical (Coupon)						
	Units		Polyester		Vinylester	
	Imperial	Metric	Imperial	Metric	Imperial	Metric
Longitudinal Direction						
Ultimate Tensile Strength	psi	N/mm^2	30,000	206	30,000	206
Ultimate Compressive Strength	psi	N/mm^2	30,000	206	30,000	206
Ultimate Flexural Strength	psi	N/mm^2	30,000	206	30,000	206
Tensile Modulus	10^6psi	KN/mm^2	2.5	17.2	2.6	17.9
Compressive Modulus	10^6psi	KN/mm^2	2.5	17.2	2.6	17.9
Flexural Modulus	10^6psi	KN/mm^2	1.8	11	2.2	11
Ultimate Shear Strength	psi	N/mm^2	3,000	20.7	3,000	20.7
Ultimate Bearing Stress	psi	N/mm^2	30,000	206	30,000	206
Izod Impact Strength	ft-lbs/in	J/mm	25	1.28	25	1.28
Transverse Direction						
Ultimate Tensile Strength	psi	N/mm^2	7,000	48.2	7,000	48.2
Ultimate Compressive Strength	psi	N/mm^2	15,000	103.4	16,000	110.3
Ultimate Flexural Strength	psi	N/mm^2	10,000	68.9	10,000	68.9
Tensile Modulus	10^6psi	KN/mm^2	0.8	5.5	0.8	5.5
Compressive Modulus	10^6psi	KN/mm^2	1	6.9	1	6.9
Flexural Modulus	10^6psi	KN/mm^2	0.8	5.5	0.8	5.5
Ultimate Bearing Stress	psi	N/mm^2	30,000	206	30,000	206
Izod Impact Strength	ft-lbs/in	J/mm	4	0.2	4	0.2
Full Section in Bending						
Modulus of Elasticity	10^6psi	KN/mm^2	2.6	17.9	2.8	19.3
Tensile Strength	psi	N/mm^2	20,000	137.9	25,000	172.4
Compressive Strength	psi	N/mm^2	20,000	137.9	25,000	172.4
Electrical						
Electric Strength		vpm		200		200
Electric Strength	KV/in		35		35	
Dielectric Constant			5.60	5.60	5.60	5.60
Dissipation Factor			0.03	0.03	0.03	0.03
Arc Resistance	sec	sec	0.28	0.28	0.28	0.28
Thermal						
Thermal Coefficient of Expansion	in/in °F	mm/mm °C	$5x10^{-6}$	$8x10^{-6}$	$5x10^{-6}$	$8x10^{-6}$
Thermal Conductivity	$BTU/ft^2/hr/^oF/in$	$W.m/m^2/^oC$	4	0.58	4	0.58
Other						
Specific Gravity						
- Solid Shapes			1.80		1.80	
- Hollow Shapes			1.83		1.83	
Water Absorption	Max % by weight		0.60		0.60	
Flame Retardant Properties						
Flame Retardant Properties		ign/burn, sec		75/75		75/75
Intermitent Flame Test	rating		100	100	100	100
Flammability Test						
- Avg.time of burning	sec		5	5	5	5
- Avg. extend of burning	in	mm		15		15
Surface Burning Characteristics (max)	FSI		25	25	25	25

Recommended Support Locations

Splice Location For Straight Sections

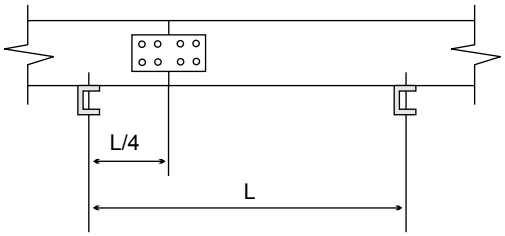

Splice Plates is recommended to be located at ¼ of the span from the support, where the bending moment is zero.

Support Location for Fittings

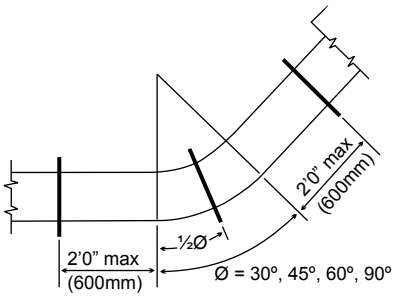

HORIZONTAL ELBOWS

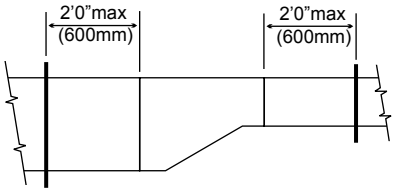

OFFSET REDUCER

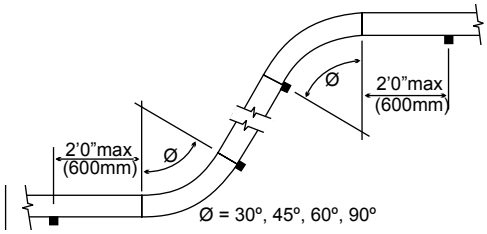

VERTICAL ELBOWS

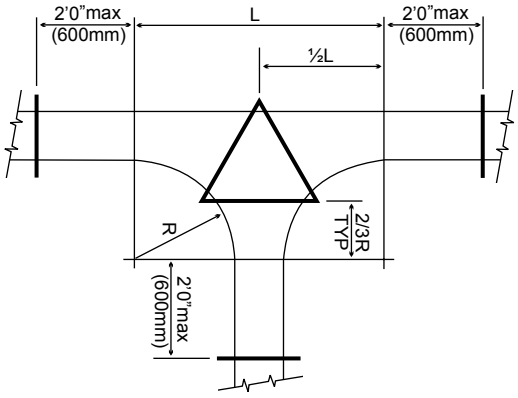

HORIZONTAL TEE

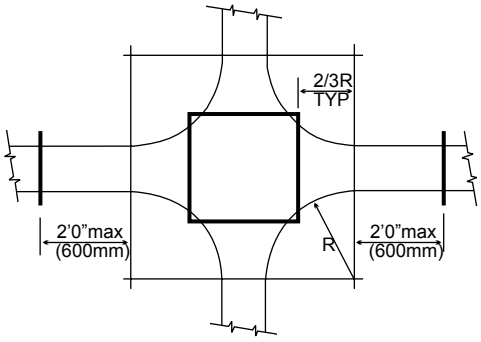

HORIZONTAL CROSS

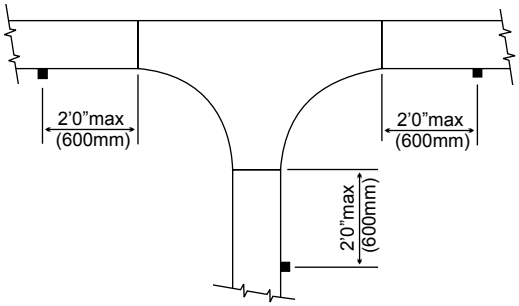

VERTICAL TEE

TRUGRID® FRP Cable Ladders M-Series

- Comes in modular form which can be supplied as:

a) Factory pre-assembled product, or

b) In component form which can be assembled at-site (thus saving on shipping space and costs)

- Easy to assemble on-site and no special tools needed
- Durable & robust design
- Light weight
- High loading capacity

Loading Capacity

The working (allowable) load capacity represents the ability of a fiberglass cable ladder to support the static weight of cables. It is equivalent to the destruction load capacity, as determined by testing in accordance with 4.1, NEMA Fg1, with a safety factor 1.5.

WORKING LOAD IN METRIC						
NEMA Classification	NEMA 16A, 12B, 8C (MA)		NEMA 20A, 16B, 12C (MB)		NEMA 20B, 16C (MC)	
SUPPORT SPAN (M)	Max. Allowable Load (kg/m)	Mid Span Defln. (mm)	Max. Allowable Load (kg/m)	Mid Span Defln. (mm)	Max. Allowable Load (kg/m)	Mid Span Defln. (mm)
6.0	64	170	79	113	138	150
5.7	70	153	88	103	153	135
5.4	79	138	98	93	171	123
5.1	88	122	110	83	192	108
4.8	100	108	125	73	216	95
4.5	113	95	141	63	247	85
4.2	130	83	162	55	283	73
3.9	150	73	189	48	328	63
3.6	177	60	222	40	384	55
3.3	211	50	264	35	459	45
3.0	256	43	319	28	554	38
2.7	316	35	393	23	685	30
2.4	399	28	498	18	867	25
2.1	500	20	595	13	1210	20
1.8	694	15	883	10	1679	15
1.5	959	10	1372	8	2322	10

WORKING LOAD IN IMPERIAL						
NEMA Classification	NEMA 16A, 12B, 8C (MA)		NEMA 20A, 16B, 12C(MB)		NEMA 20B, 16C (MC)	
SUPPORT SPAN (FT)	Max. Allowable Load (lb/ft)	Mid Span Defln. (in)	Max. Allowable Load (lb/ft)	Mid Span Defln. (in)	Max. Allowable Load (lb/ft)	Mid Span Defln. (in)
20	43	6.8	53	4.5	93	6.0
19	47	6.1	59	4.1	103	5.4
18	53	5.5	66	3.7	115	4.9
17	59	4.9	74	3.3	129	4.3
16	67	4.3	84	2.9	145	3.8
15	76	3.8	95	2.5	166	3.4
14	87	3.3	109	2.2	190	2.9
13	101	2.9	127	1.9	220	2.5
12	119	2.4	149	1.6	258	2.2
11	142	2.0	177	1.4	308	1.8
10	172	1.7	214	1.1	372	1.5
9	212	1.4	264	0.9	460	1.2
8	268	1.1	334	0.7	582	1.0
7	335	0.8	399	0.5	811	0.8
6	465	0.6	591	0.4	1126	0.6
5	643	0.4	920	0.3	1557	0.4

MA	Ladder rated to 50 lb/ft (75 kg/m)	as per NEMA FG 1 - 1993
MB	Ladder rated to 75 lb/ft (112 kg/m)	as per NEMA FG 1 - 1993
MC	Ladder rated to 100 lb/ft (150 kg/m)	as per NEMA FG 1 - 1993

Straight Sections

NEMA 16A, 12B, 8C (MA) Cable Ladder

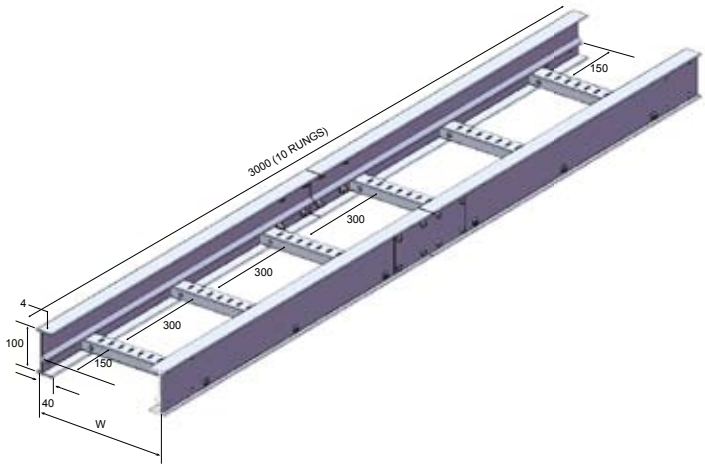

TYPE MA

Loading	: 75 kg/m for 5.4m Span
Colour	: Grey
Std. Length	: 3m
Width (W)	: 200mm, 300mm, 400mm, 600mm & 800mm
Rung Thickness	: 25mm
Loading Depth	: 71mm
Weight	: 10 kg/length, 11 kg/length, 12 kg/length, 14 kg/length & 15 kg/length

NEMA 20A, 16B, 12C (MB) Cable Ladder

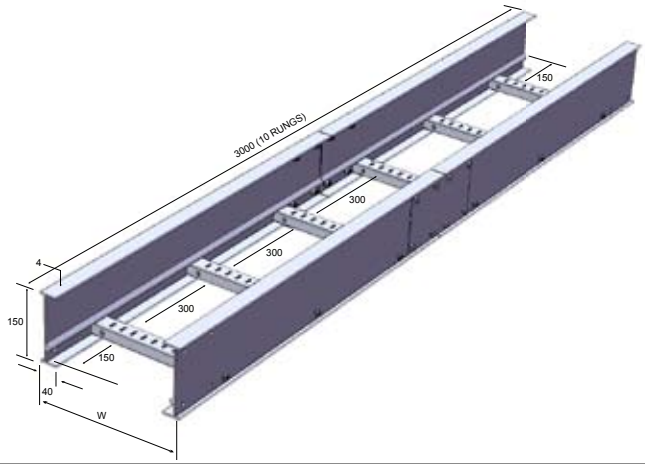

TYPE MB

Loading	: 112 kg/m for 4.8m Span
Colour	: Grey
Std. Length	: 3m
Width (W)	: 200mm, 300mm, 400mm, 600mm & 800mm
Rung Thickness	: 25mm
Loading Depth	: 121mm
Weight	: 12 kg/length, 13 kg/length, 14 kg/length, 16 kg/length & 17 kg/length

NEMA 20B, 16C (MC) Cable Ladder

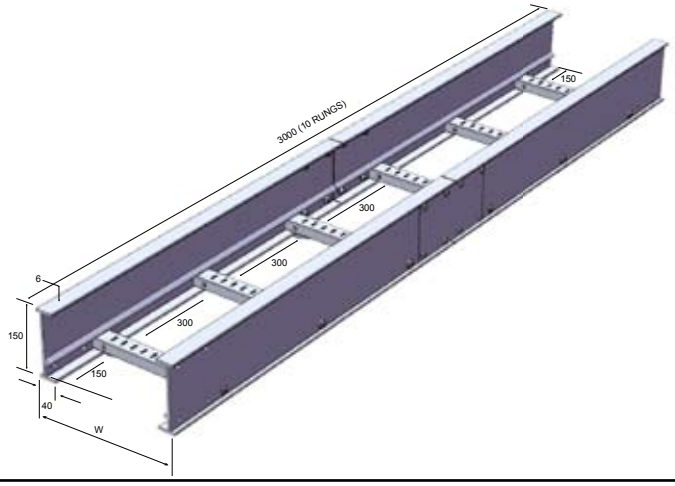

TYPE MC

Loading	: 150 kg/m for 5.7m Span
Colour	: Grey
Std. Length	: 3m
Width (W)	: 200mm, 300mm, 400mm, 600mm & 800mm
Rung Thickness	: 25mm
Loading Depth	: 119mm
Weight	: 17 kg/length, 18 kg/length, 19 kg/length, 20 kg/length & 22 kg/length

Mitered Fittings

90º Horizontal Radius

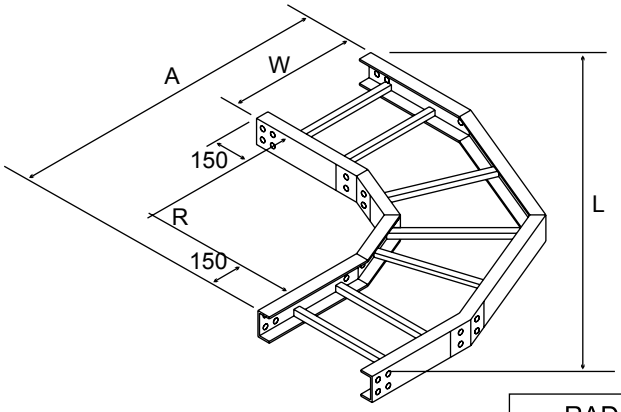

RADIUS (mm)	300		600		900	
CODE NUMBER	A (mm)	L (mm)	A (mm)	L (mm)	A (mm)	L (mm)
"CLASS" -90HE-R____-W200	650	919	950	1344	1250	1768
"CLASS" -90HE-R____-W300	750	1061	1050	1485	1350	1909
"CLASS" -90HE-R____-W400	850	1202	1150	1626	1450	2051
"CLASS" -90HE-R____-W600	1050	1485	1350	1909	1650	2333
"CLASS" -90HE-R____-W800	1250	1768	1550	2192	1850	2616
"CLASS" -90HE-R____-W900	1350	1909	1650	2333	1950	2758

30°, 45° Horizontal Elbow

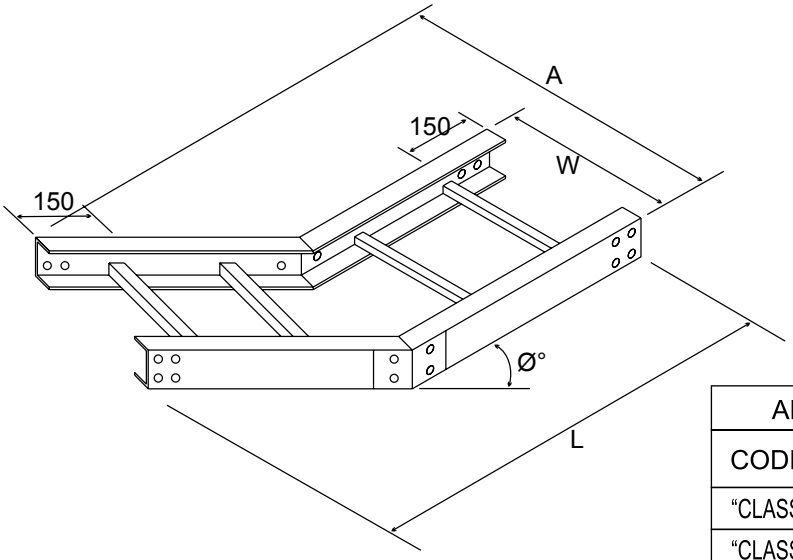

ANGLE Ø°	30		45	
CODE NUMBER	A (Mm)	L (Mm)	A (mm)	L (mm)
"CLASS" -30/45HE-W200	380	772	455	756
"CLASS" -30/45HE-W300	480	822	555	827
"CLASS" -30/45HE-W400	580	872	655	897
"CLASS" -30/45HE-W600	780	972	855	1039
"CLASS" -30/45HE-W800	980	1072	1055	1180
"CLASS" -30/45HE-W900	1080	1122	1155	1251

* CLASS = MA, MB or MC

Mitered Fittings

60º Horizontal Elbow

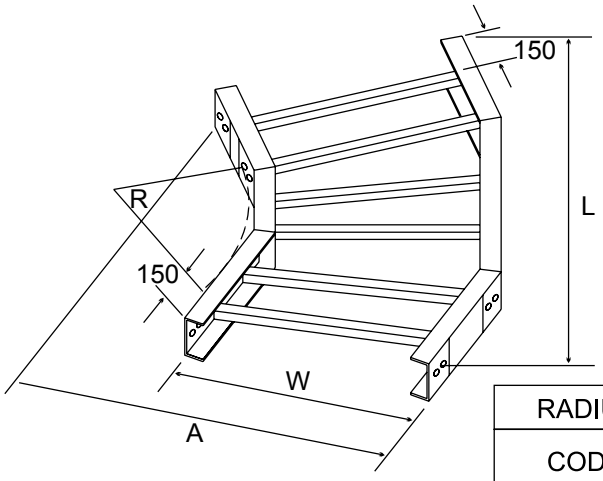

RADIUS, R (mm)	300		600		900	
CODE NUMBER	A (mm)	L (mm)	A (mm)	L (mm)	A (mm)	L (mm)
“CLASS” -60HE-R____-W200	480	658	630	918	780	1178
“CLASS” -60HE-R____-W300	580	745	730	1004	880	1264
“CLASS” -60HE-R____-W400	680	831	830	1091	980	1351
“CLASS” -60HE-R____-W600	880	1004	1030	1264	1180	1524
“CLASS” -60HE-R____-W800	1080	1178	1230	1437	1380	1697
“CLASS” -60HE-R____-W900	1180	1264	1330	1524	1480	1784

90° Outside Vertical Elbow

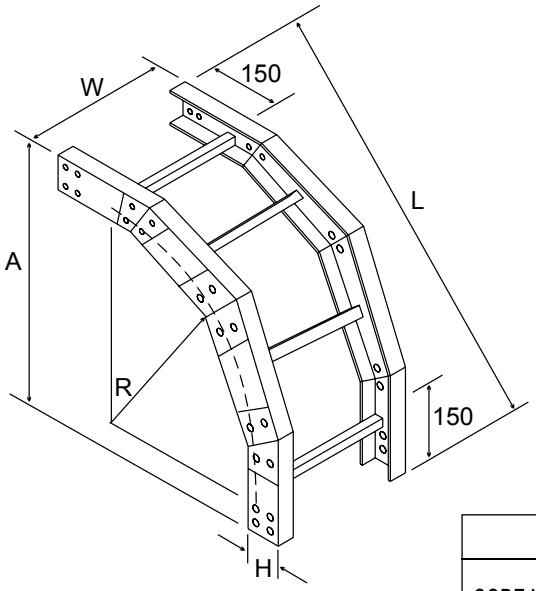

RADIUS (mm)	300		600		900	
CODE NUMBER / DIMENSION	A (mm)	L (mm)	A (mm)	L (mm)	A (mm)	L (mm)
MA-90 OVE-R____-W____	552	781	852	1205	1152	1629
MB-90 OVE-R____-W____	602	851	902	1276	1202	1700
MC-90 OVE-R____-W____	602	851	902	1276	1202	1700

* CLASS = MA, MB or MC

Mitered Fittings

60º Outside Vertical Elbow

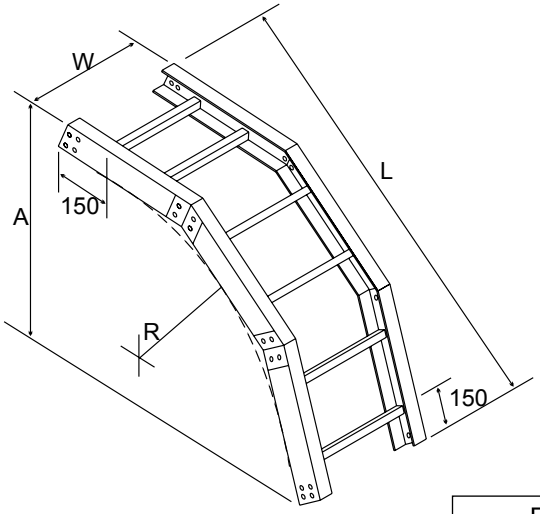

RADIUS (mm)	300		600		900	
CODE NUMBER / DIMENSION	A (mm)	L (mm)	A (mm)	L (mm)	A (mm)	L (mm)
MA-60 OVE-W____ -R____	382	573	532	833	682	1093
MB-60 OVE-W____ -R____	432	616	582	876	732	1136
MC-60 OVE-W____ -R____	432	616	582	876	732	1136

30°, 45° Outside Vertical Elbow

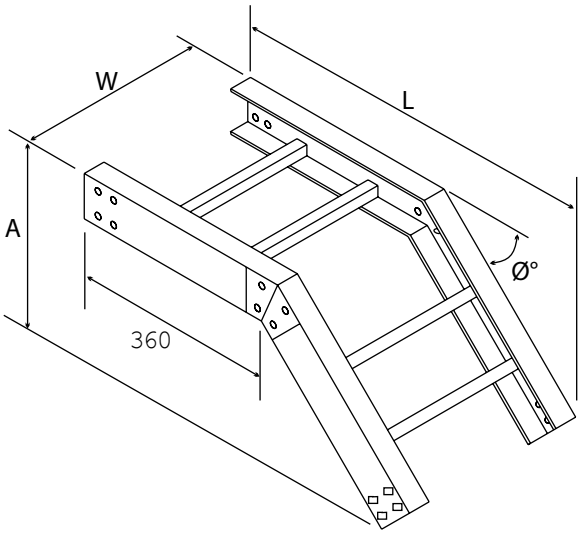

CODE NUMBER	A (mm)	L (mm)
MA-30 OVE-W____	282	723
MB-30 OVE-W____	332	748
MC-30 OVE-W____	332	748
MA-45 OVE-W____	357	687
MB-45 OVE-W____	407	722
MC-45 OVE-W____	407	722

* CLASS = MA, MB or MC

Mitered Fittings

90º Inside Vertical Elbow

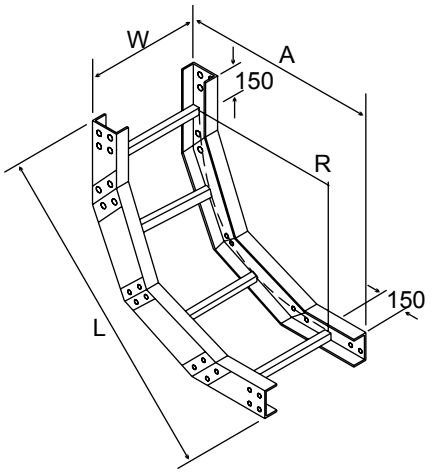

RADIUS (mm)	300		600		900	
CODE NUMBER \ DIMENSION	A (mm)	L (mm)	A (mm)	L (mm)	A (mm)	L (mm)
MA-90 IVE-R____-W____	482	682	782	1106	1082	1530
MB-90 IVE-R____-W____	482	682	782	1106	1082	1530
MC-90 IVE-R____-W____	482	682	782	1106	1082	1530

60° Inside Vertical Elbow

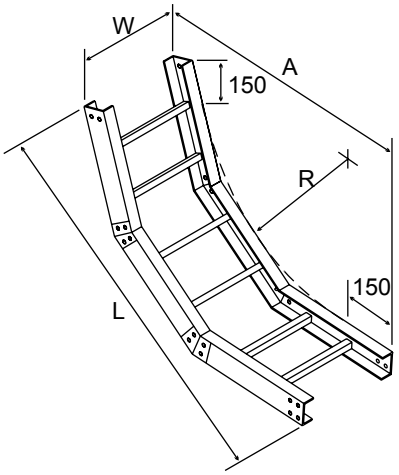

RADIUS (mm)	300		600		900	
CODE NUMBER \ DIMENSION	A (mm)	L (mm)	A (mm)	L (mm)	A (mm)	L (mm)
MA-60 IVE-W____-R____	312	513	462	773	612	1032
MB-60 IVE-W____-R____	312	513	462	773	612	1032
MC-60 IVE-W____-R____	312	513	462	773	612	1032

30°, 45° Inside Vertical Elbow

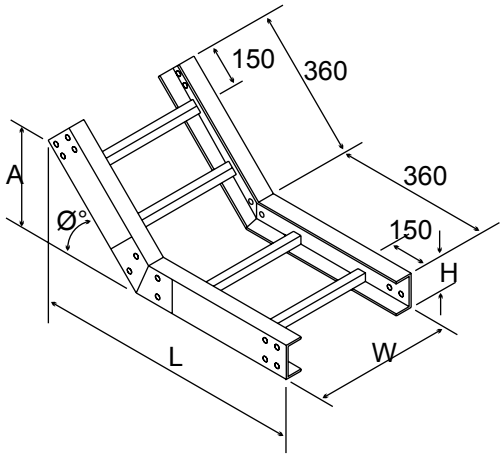

CODE NUMBER	A (mm)	L (mm)
MA-30 IVE-W____	194	723
MB-30 IVE-W____	200	748
MC-30 IVE-W____	200	748
MA-45 IVE-W____	284	687
MB-45 IVE-W____	299	722
MC-45 IVE-W____	299	722

Mitered Fittings

Horizontal Tee

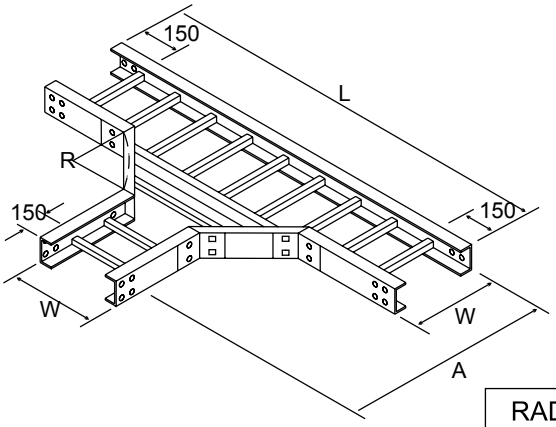

RADIUS, R (mm)	300		600		900	
CODE NUMBER	A (mm)	L (mm)	A (mm)	L (mm)	A (mm)	L (mm)
“CLASS” -HT-R____-W200	860	1520	1160	2120	1460	2720
“CLASS” -HT-R____-W300	960	1620	1260	2220	1560	2820
“CLASS” -HT-R____-W400	1060	1720	1360	2320	1660	2920
“CLASS” -HT-R____-W600	1260	1920	1560	2520	1860	3120
“CLASS” -HT-R____-W800	1460	2120	1760	2720	2060	3320
“CLASS” -HT-R____-W900	1560	2220	1860	2820	2160	3420

Horizontal Cross

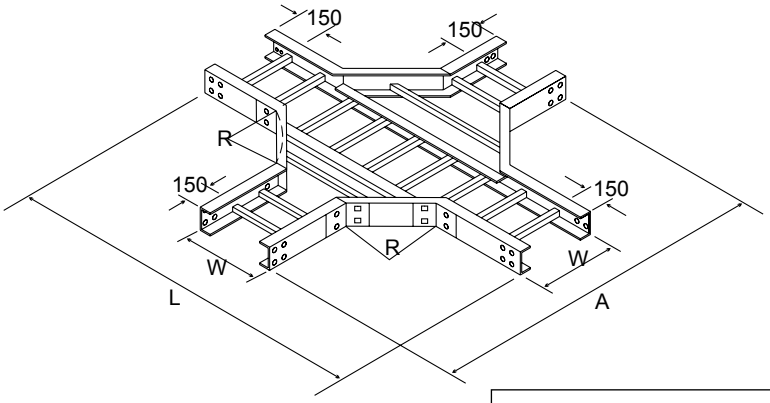

RADIUS, R (mm)	300		600		900	
CODE NUMBER	A (mm)	L (mm)	A (mm)	L (mm)	A (mm)	L (mm)
“CLASS” -HC-R____-W200	1520	1520	2120	2120	2720	2720
“CLASS” -HC-R____-W300	1620	1620	2220	2220	2820	2820
“CLASS” -HC-R____-W400	1720	1720	2320	2320	2920	2920
“CLASS” -HC-R____-W600	1920	1920	2520	2520	3120	3120
“CLASS” -HC-R____-W800	2120	2120	2720	2720	3320	3320
“CLASS” -HC-R____-W900	2220	2220	2820	2820	3420	3420

* CLASS = MA, MB or MC

Mitered Fittings

Straight Reducer

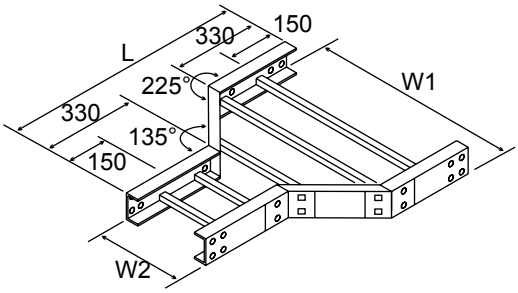

DIMENSION		L (mm)					
CODE NUMBER	W1 / W2	900	800	600	400	300	200
"CLASS" -SR-W1-W2	200	1010	960	860	760	710	
"CLASS" -SR-W1-W2	300	960	910	810	710		
"CLASS" -SR-W1-W2	400	910	860	760			
"CLASS" -SR-W1-W2	600	810	760				
"CLASS" -SR-W1-W2	800	710					
"CLASS" -SR-W1-W2	900						

Left Hand Reducer

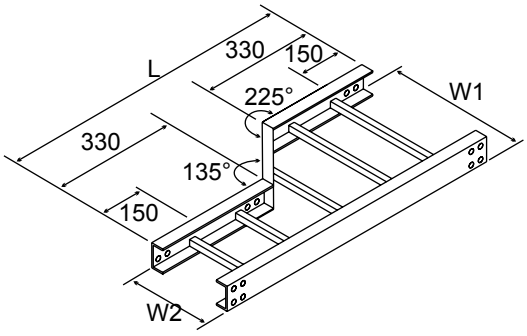

DIMENSION		L (mm)					
CODE NUMBER	W1 / W2	900	800	600	400	300	200
"CLASS" -LHR-W1-W2	200	1360	1260	1060	860	760	
"CLASS" -LHR-W1-W2	300	1260	1160	960	760		
"CLASS" -LHR-W1-W2	400	1160	1060	860			
"CLASS" -LHR-W1-W2	600	960	860				
"CLASS" -LHR-W1-W2	800	760					
"CLASS" -LHR-W1-W2	900						

Right Hand Reducer

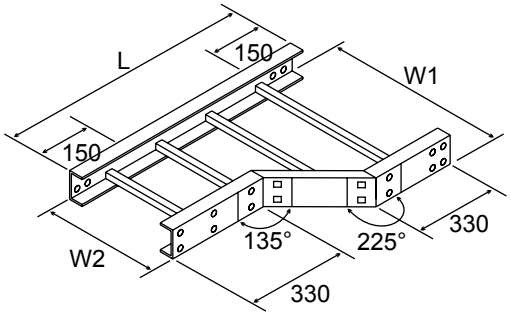

DIMENSION		L (mm)					
CODE NUMBER	W1 / W2	900	800	600	400	300	200
"CLASS" -RHR-W1-W2	200	1360	1260	1060	860	760	
"CLASS" -RHR-W1-W2	300	1260	1160	960	760		
"CLASS" -RHR-W1-W2	400	1160	1060	860			
"CLASS" -RHR-W1-W2	600	960	860				
"CLASS" -RHR-W1-W2	800	760					
"CLASS" -RHR-W1-W2	900						

* CLASS = MA, MB or MC

Splice Plate

Fixed Splice Plate

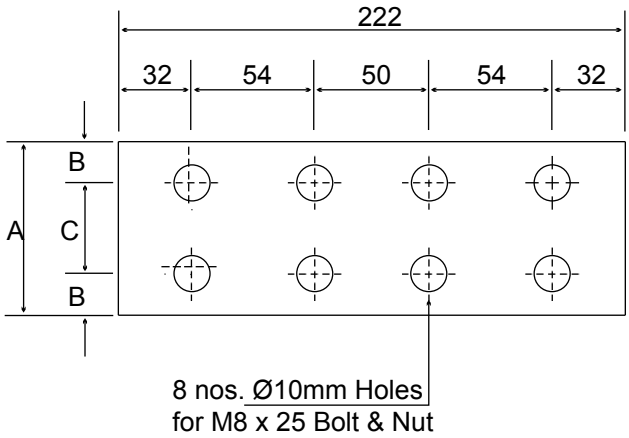

	DIMENSION (mm)		
CODE NUMBER	A	B	C
MA-FSP-102	90	11.5	67
MB-FSP-152	140	11.5	117
MC-FSP-152	136	11.5	113

Expansion Splice Plate

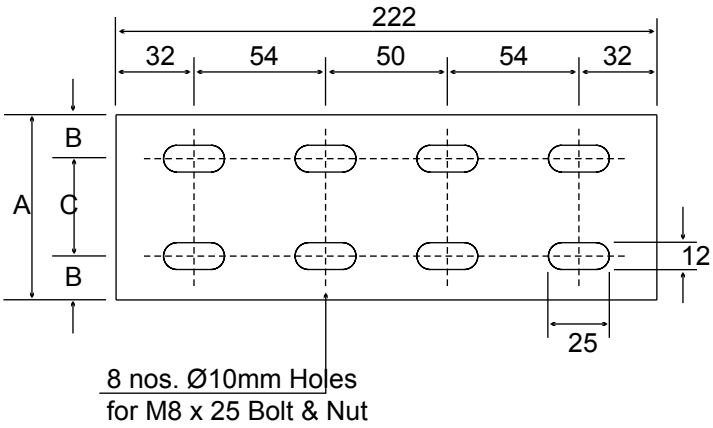

	DIMENSION (mm)		
CODE NUMBER	A	B	C
MA-FSP-102	90	11.5	67
MB-FSP-152	140	11.5	117
MC-FSP-152	136	11.5	113

Horizontal Angle Splice Plate

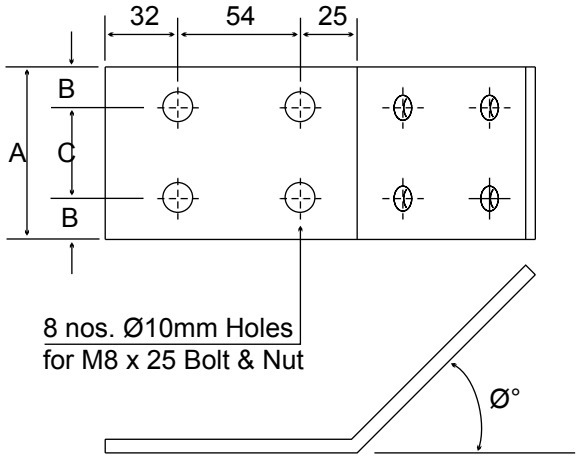

	DIMENSION (mm)		
CODE NUMBER	A	B	C
MA-HASP- Ø°	90	11.5	67
MB-HASP- Ø°	140	11.5	117
MC-HASP- Ø°	136	11.5	113

Splice Plate

Vertical Angle Splice Plate

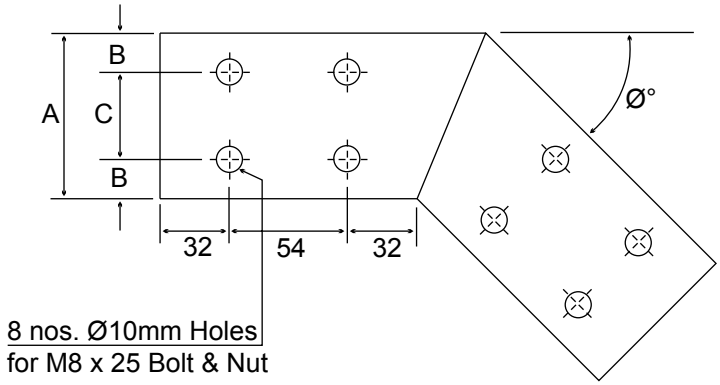

	DIMENSION (mm)		
CODE NUMBER	A	B	C
MA-VASP- Ø°	90	11.5	67
MB-VASP- Ø°	140	11.5	117
MC-VASP- Ø°	136	11.5	113

Adjustable Horizontal Splice Plate (AHSP)

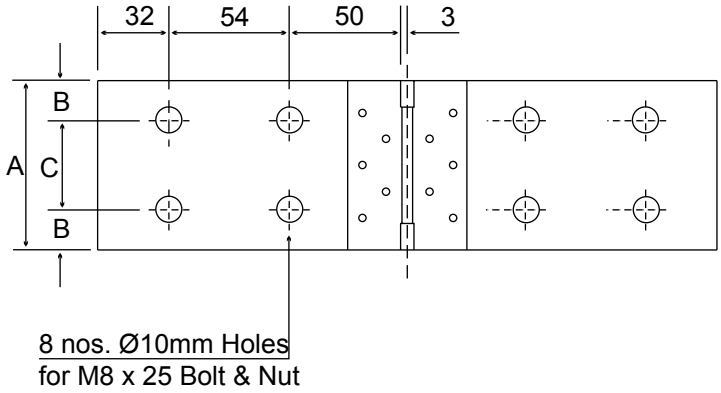

	DIMENSION (mm)		
CODE NUMBER	A	B	C
MA-AHSP- 102	90	11.5	67
MB-AHSP- 152	140	11.5	117
MC-AHSP- 152	136	11.5	113

Adjustable Vertical Splice Plate (AVSP)

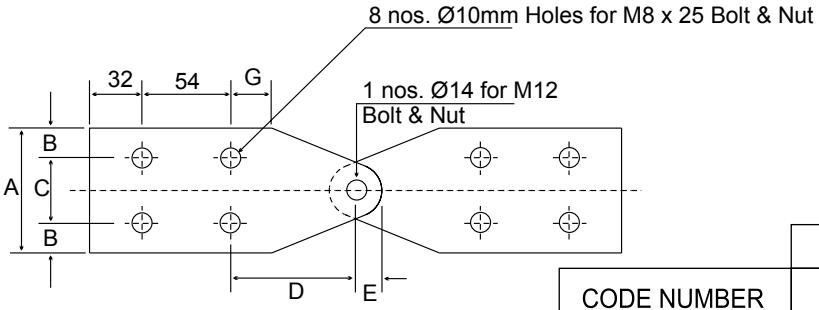

	DIMENSION (mm)					
CODE NUMBER	A	B	C	D	E	G
MA-AVSP- 102	90	11.5	67	75	16	15
MB-AVSP- 152	140	11.5	117	75	16	15
MC-AVSP- 152	136	11.5	113	119	30	25

Splice Plate

Expansion Adjustable Horizontal Splice Plate (EAHSP)

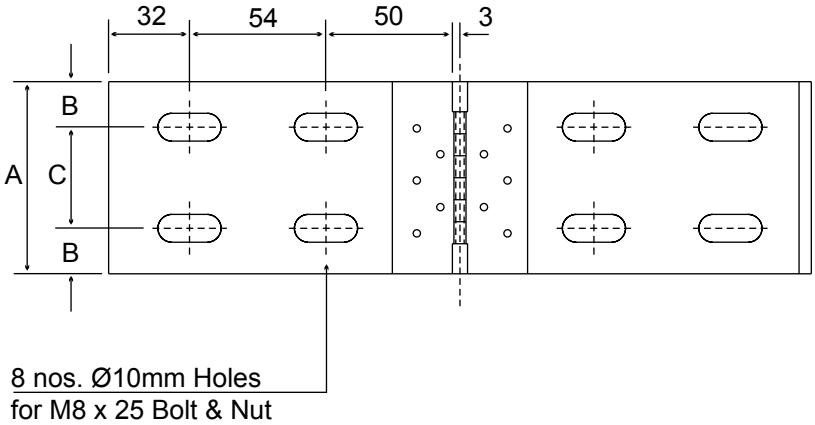

	DIMENSION (mm)		
CODE NUMBER	A	B	C
MA-EAHSP- 102	90	11.5	67
MB-EAHSP- 152	140	11.5	117
MC-EAHSP- 152	136	11.5	113

Expansion Adjustable Vertical Splice Plate (EAVSP)

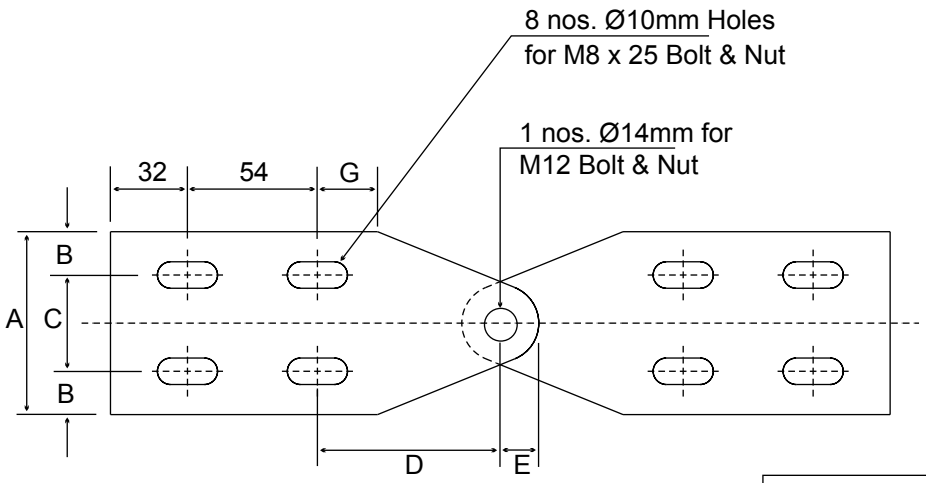

	DIMENSION (mm)					
CODE NUMBER	A	B	C	D	E	G
MA-EAVSP- 102	90	11.5	67	75	16	15
MB-EAVSP- 152	140	11.5	117	75	16	15
MC-EAVSP- 152	136	11.5	113	119	30	25

Note : FRP - 6.4mm thk, SS - 2mm thk.

Clamp

Hold Down Clamp

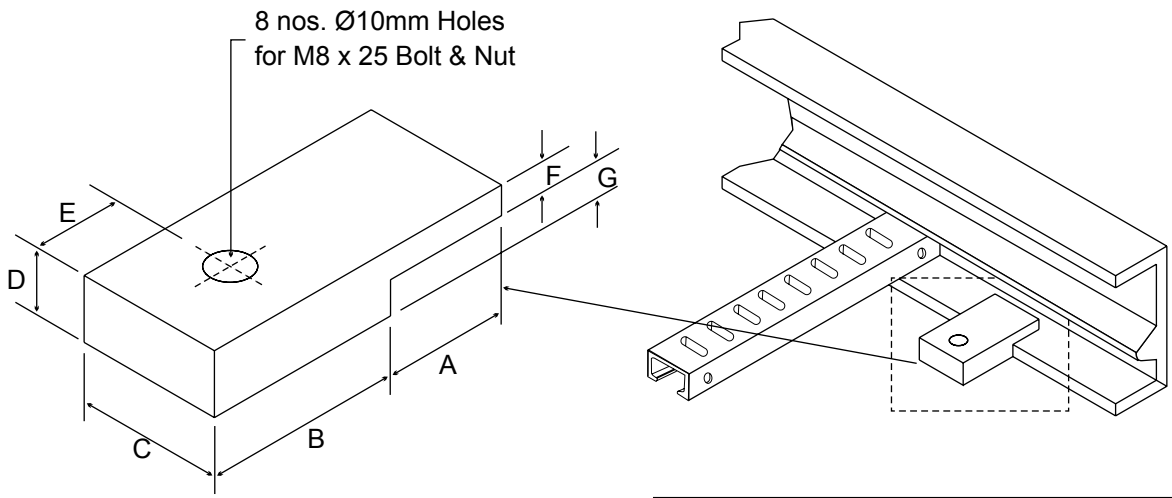

	DIMENSION (mm)						
CODE NUMBER	A	B	C	D	E	F	G
MC-HDC	27	40	38	12	23	6	5.9
MA/MB-HDC	27	37	38	10.7	23	6	3.9

Vertical Fixing Clamp

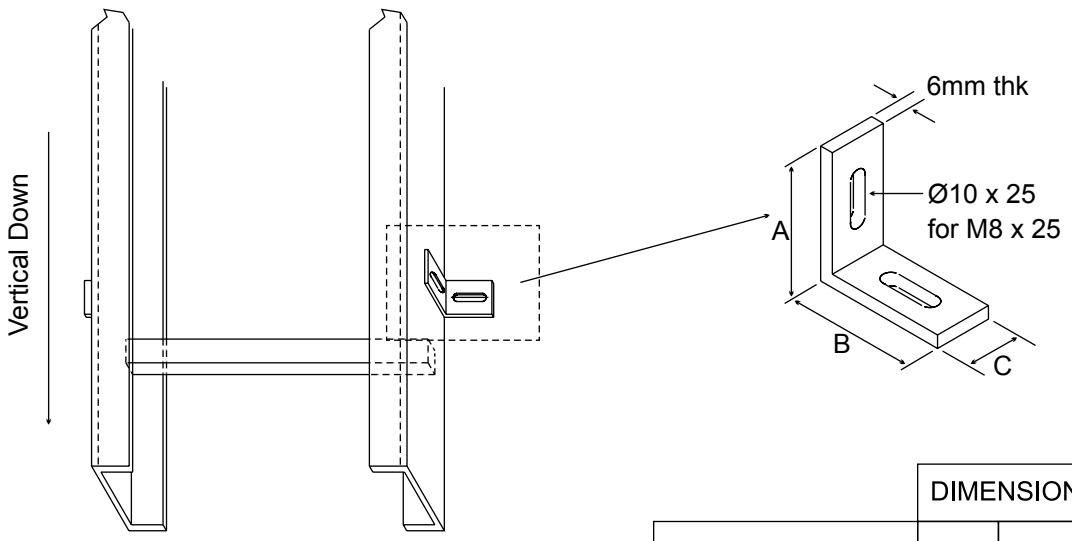

	DIMENSION (mm)		
CODE NUMBER	A	B	C
MA-VFC	50	50	40
MB-VFC	75	75	40
MC-VFC	75	75	40

The Component Parts

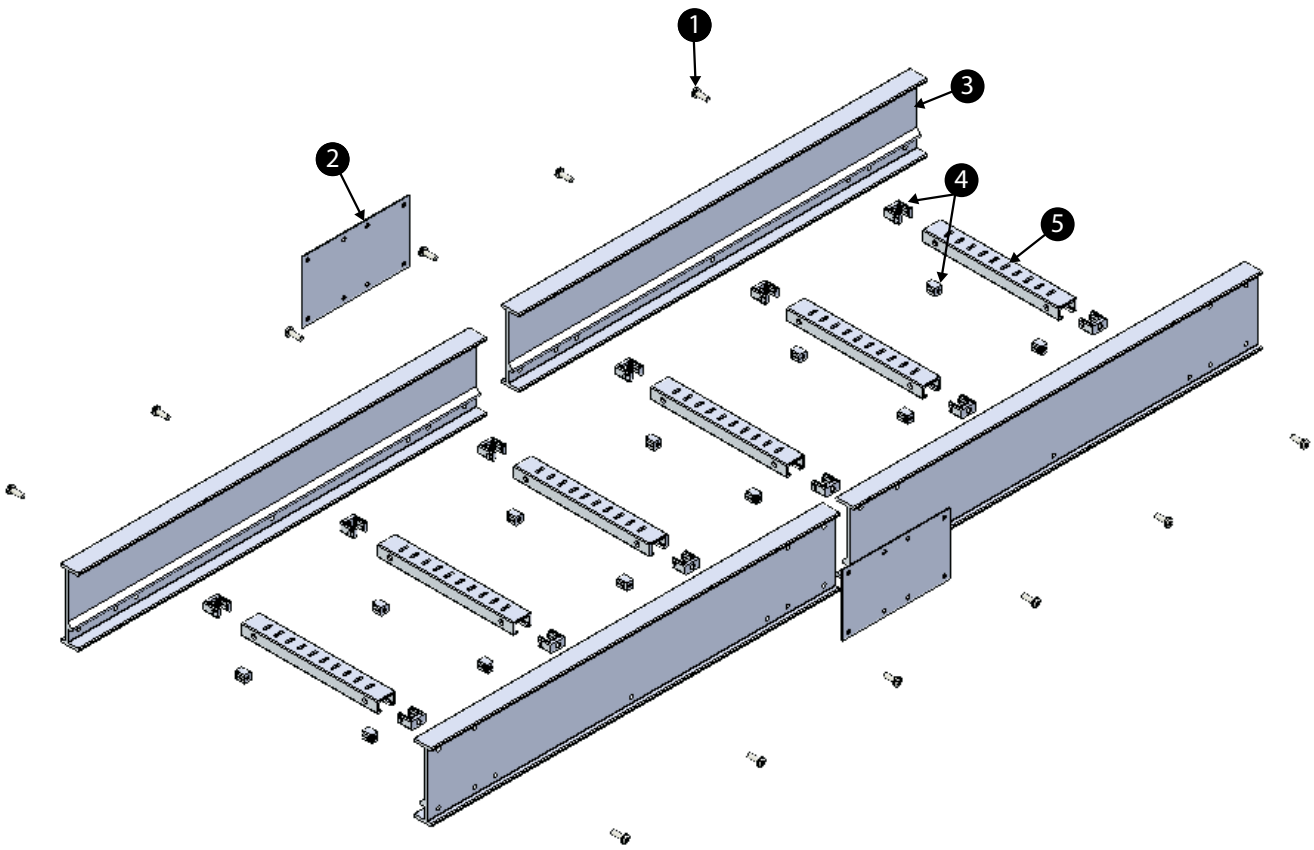

The component parts of modular series cable ladder:

1. Philip Pan Head M8 Bolt
2. Splice Plate
3. E-Rail
4. Clip
5. Slotted Rung

TRUGRID® FRP Cable Ladders N-Series

Loading Capacity

The working (allowable) load capacity represents the ability of a fiberglass cable ladder to support the static weight of cables. It is equivalent to the destruction load capacity, as determined by testing in accordance with 4.1, NEMA Fg1, with a safety factor 1.5.

WORKING LOAD IN METRIC								
NEMA Classification	NEMA 16A, 12B, 8C (NA)		NEMA 20A, 16B, 12C (NB)		NEMA 20B, 16C (NC)		NEMA 20C Super Duty (SD)	
SUPPORT SPAN (M)	Max. Allowable Load (kg/m)	Mid Span Defln. (mm)	Max. Allowable Load (kg/m)	Mid Span Defln. (mm)	Max. Allowable Load (kg/m)	Mid Span Defln. (mm)	Max. Allowable Load (kg/m)	Mid Span Defln. (mm)
6.0	64	170	79	113	138	150	211	138
5.7	70	153	88	103	153	135	235	123
5.4	79	138	98	93	171	123	262	110
5.1	88	122	110	83	192	108	293	98
4.8	100	108	125	73	216	95	332	88
4.5	113	95	141	63	247	85	378	78
4.2	130	83	162	55	283	73	433	68
3.9	150	73	189	48	328	63	504	58
3.6	177	60	222	40	384	55	590	50
3.3	211	50	264	35	459	45	704	43
3.0	256	43	319	28	554	38	851	35
2.7	316	35	393	23	685	30	1051	28
2.4	399	28	498	18	867	25	1329	23
2.1	500	20	595	13	1210	20	1797	18
1.8	694	15	883	10	1679	15	1901	10
1.5	959	10	1372	8	2322	10	2957	8

WORKING LOAD IN IMPERIAL								
NEMA Classification	NEMA 16A, 12B, 8C (NA)		NEMA 20A, 16B, 12C (NB)		NEMA 20B, 16C (NC)		NEMA 20C Super Duty (SD)	
SUPPORT SPAN (FT)	Max. Allowable Load (lb/ft)	Mid Span Defln. (in)	Max. Allowable Load (lb/ft)	Mid Span Defln. (in)	Max. Allowable Load (lb/ft)	Mid Span Defln. (in)	Max. Allowable Load (lb/ft)	Mid Span Defln. (in)
20	43	6.8	53	4.5	93	6.0	142	5.5
19	47	6.1	59	4.1	103	5.4	158	4.9
18	53	5.5	66	3.7	115	4.9	176	4.4
17	59	4.9	74	3.3	129	4.3	197	3.9
16	67	4.3	84	2.9	145	3.8	223	3.5
15	76	3.8	95	2.5	166	3.4	254	3.1
14	87	3.3	109	2.2	190	2.9	291	2.7
13	101	2.9	127	1.9	220	2.5	338	2.3
12	119	2.4	149	1.6	258	2.2	396	2.0
11	142	2.0	177	1.4	308	1.8	472	1.7
10	172	1.7	214	1.1	372	1.5	571	1.4
9	212	1.4	264	0.9	460	1.2	705	1.1
8	268	1.1	334	0.7	582	1.0	892	0.9
7	335	0.8	399	0.5	811	0.8	1205	0.7
6	465	0.6	591	0.4	1126	0.6	1275	0.4
5	643	0.4	920	0.3	1557	0.4	1983	0.3

NA	Ladder rated to 50 lb/ft (75 kg/m)	as per NEMA FG 1 - 1993
NB	Ladder rated to 75 lb/ft (112 kg/m)	as per NEMA FG 1 - 1993
NC	Ladder rated to 100 lb/ft (150 kg/m)	as per NEMA FG 1 - 1993
SD	Ladder rated to 200 lb/ft (300 kg/m)	

Straight Sections

NEMA 16A, 12B, 8C (NA) Cable Ladder

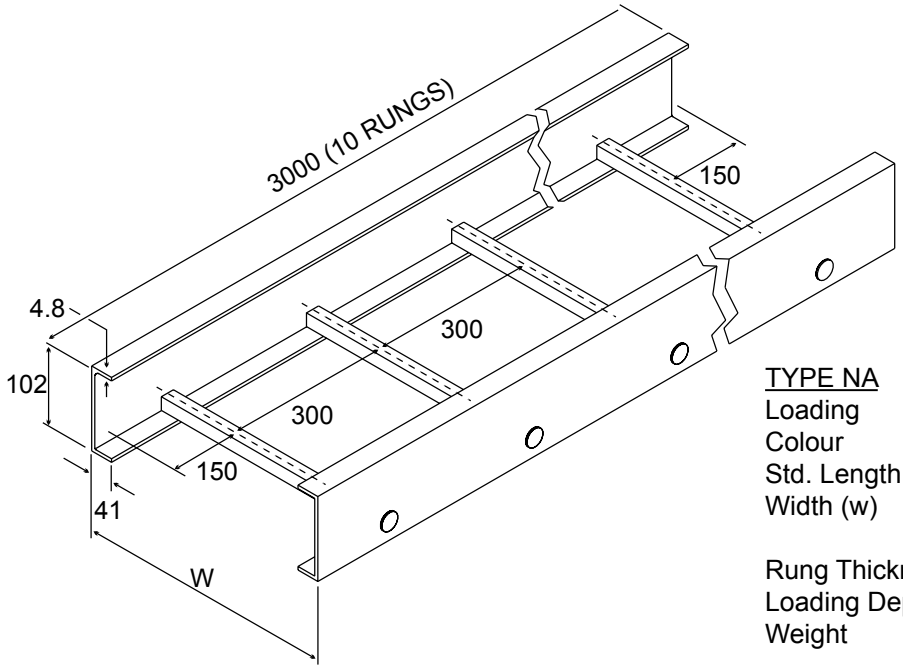

TYPE NA

Loading	: 75 kg/m for 5.4m Span
Colour	: Grey
Std. Length	: 3m
Width (w)	: 200mm, 300mm, 400mm, 600mm & 800mm
Rung Thickness	: 25mm
Loading Depth	: 72mm
Weight	: 10 kg/length, 11 kg/length, 12 kg/length, 14 kg/length & 15 kg/length

NEMA 20A, 16B, 12C (NB) Cable Ladder

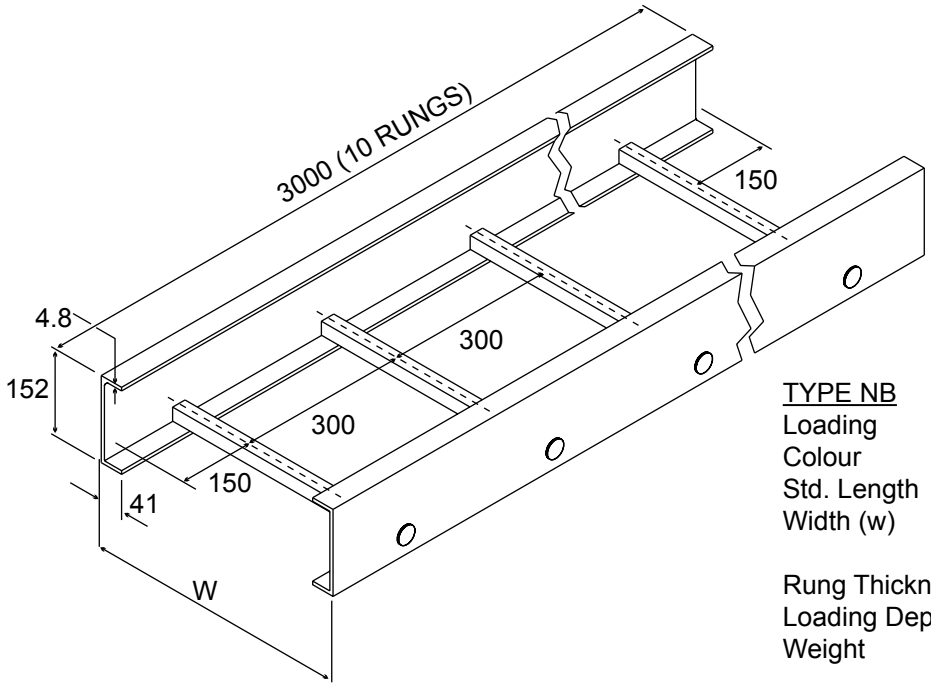

TYPE NB

Loading	: 112 kg/m for 4.8m Span
Colour	: Grey
Std. Length	: 3m
Width (w)	: 200mm, 300mm, 400mm, 600mm & 800mm
Rung Thickness	: 25mm
Loading Depth	: 120mm
Weight	: 12 kg/length, 13 kg/length, 14 kg/length, 16 kg/length & 17 kg/length

Straight Sections

NEMA 20B, 16C (NC) Cable Ladder

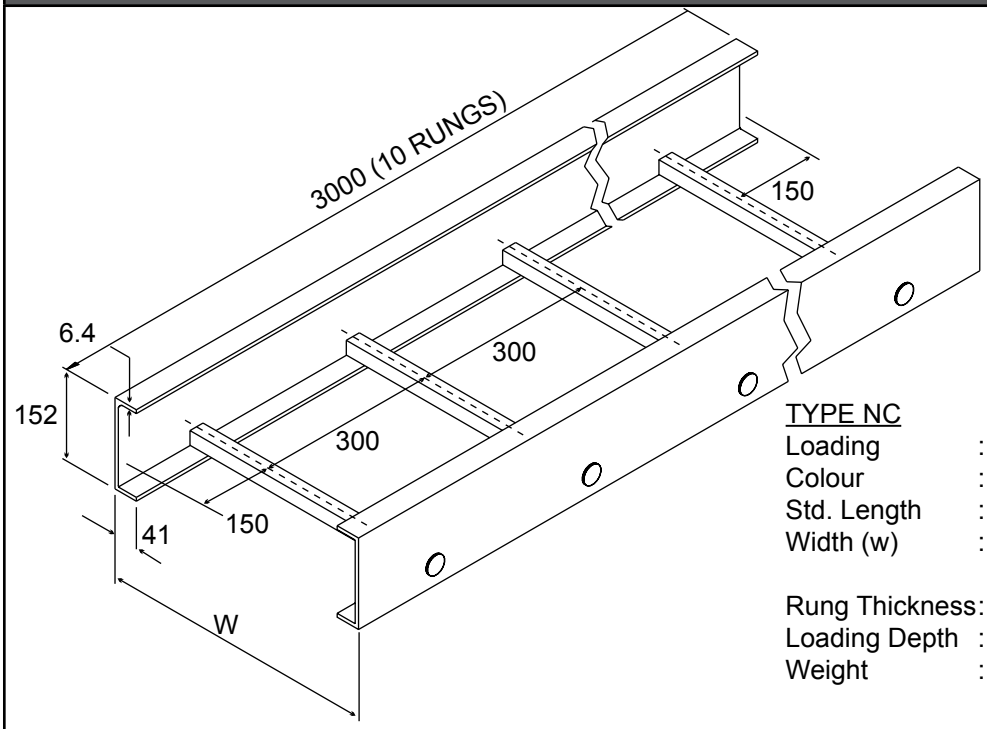

TYPE NC

Loading	: 150 kg/m for 5.7m Span
Colour	: Grey
Std. Length	: 3m
Width (w)	: 200mm, 300mm, 400mm, 600mm & 800mm
Rung Thickness	: 25mm
Loading Depth	: 120mm
Weight	: 17 kg/length, 18 kg/length, 19 kg/length, 20 kg/length & 22 kg/length

NEMA 20C Super Duty (SD) Cable Ladder

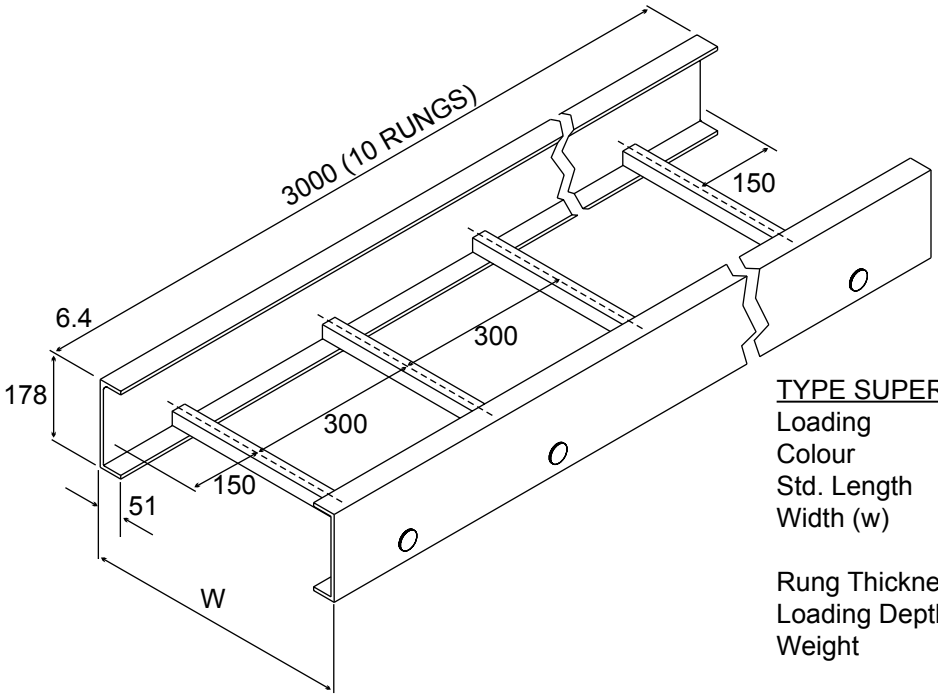

TYPE SUPER DUTY

Loading	: 300 kg/m for 4.8m Span
Colour	: Grey
Std. Length	: 3m
Width (w)	: 200mm, 300mm, 400mm, 600mm & 800mm
Rung Thickness	: 25mm
Loading Depth	: 146mm
Weight	: 20 kg/length, 21 kg/length, 22 kg/length, 24 kg/length & 25 kg/length

Mitered Fittings

90º Horizontal Radius

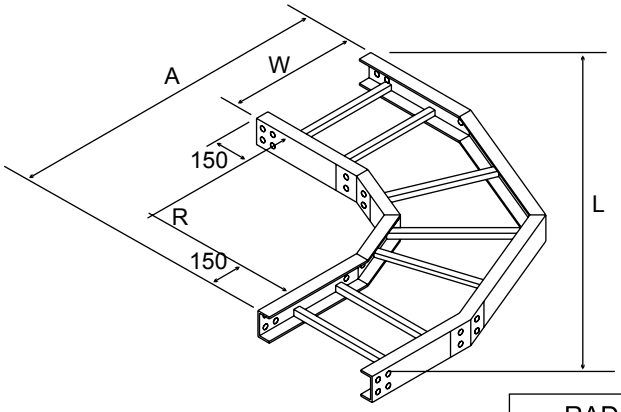

RADIUS (mm)	300		600		900	
CODE NUMBER	A (mm)	L (mm)	A (mm)	L (mm)	A (mm)	L (mm)
"CLASS" -90HE-R____-W200	650	919	950	1344	1250	1768
"CLASS" -90HE-R____-W300	750	1061	1050	1485	1350	1909
"CLASS" -90HE-R____-W400	850	1202	1150	1626	1450	2051
"CLASS" -90HE-R____-W600	1050	1485	1350	1909	1650	2333
"CLASS" -90HE-R____-W800	1250	1768	1550	2192	1850	2616
"CLASS" -90HE-R____-W900	1350	1909	1650	2333	1950	2758

30°, 45° Horizontal Elbow

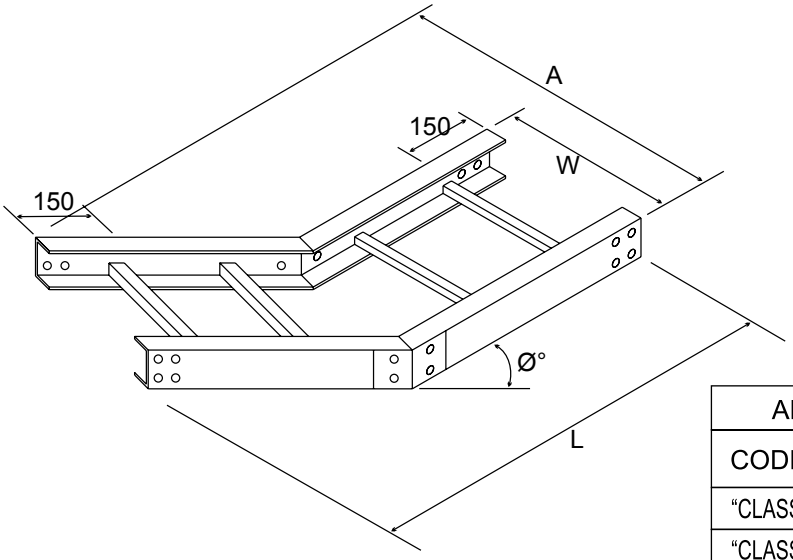

ANGLE Ø°	30		45	
CODE NUMBER	A (Mm)	L (Mm)	A (mm)	L (mm)
"CLASS" -30/45HE-W200	380	772	455	756
"CLASS" -30/45HE-W300	480	822	555	827
"CLASS" -30/45HE-W400	580	872	655	897
"CLASS" -30/45HE-W600	780	972	855	1039
"CLASS" -30/45HE-W800	980	1072	1055	1180
"CLASS" -30/45HE-W900	1080	1122	1155	1251

* CLASS = NA, NB, NC or SD

Mitered Fittings

60º Horizontal Elbow

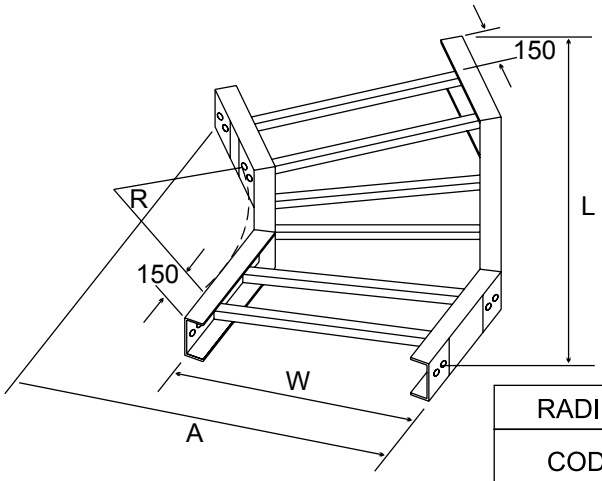

RADIUS, R (mm)	300		600		900	
CODE NUMBER	A (mm)	L (mm)	A (mm)	L (mm)	A (mm)	L (mm)
"CLASS" -60HE-R____-W200	480	658	630	918	780	1178
"CLASS" -60HE-R____-W300	580	745	730	1004	880	1264
"CLASS" -60HE-R____-W400	680	831	830	1091	980	1351
"CLASS" -60HE-R____-W600	880	1004	1030	1264	1180	1524
"CLASS" -60HE-R____-W800	1080	1178	1230	1437	1380	1697
"CLASS" -60HE-R____-W900	1180	1264	1330	1524	1480	1784

90° Outside Vertical Elbow

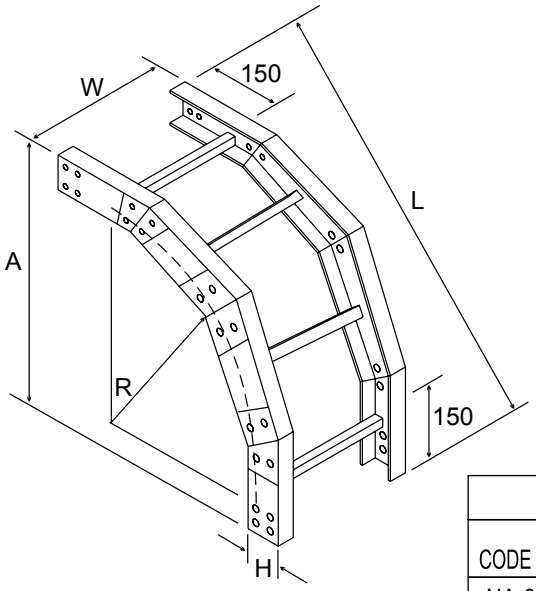

RADIUS (mm)	300		600		900	
CODE NUMBER / DIMENSION	A (mm)	L (mm)	A (mm)	L (mm)	A (mm)	L (mm)
NA-90 OVE-R_____-W_____	552	781	852	1205	1152	1629
NB-90 OVE-R_____-W_____	602	851	902	1276	1202	1700
NC-90 OVE-R_____-W_____	602	851	902	1276	1202	1700
SD-90 OVE-R_____-W_____	628	888	928	1312	1228	1737

* CLASS = NA, NB, NC or SD

Mitered Fittings

60º Outside Vertical Elbow

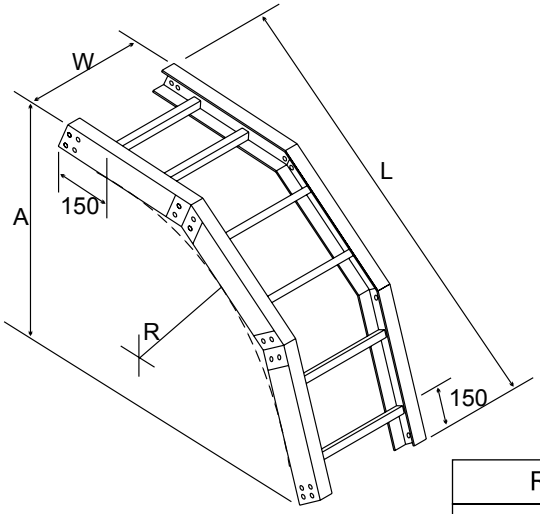

RADIUS (mm)	300		600		900	
CODE NUMBER \ DIMENSION	A (mm)	L (mm)	A (mm)	L (mm)	A (mm)	L (mm)
NA-60 OVE-W_____-R_____	382	573	532	833	682	1093
NB-60 OVE-W_____-R_____	432	616	582	876	732	1136
NC-60 OVE-W_____-R_____	432	616	582	876	732	1136
SD-60 OVE-W_____-R_____	458	639	608	899	758	1159

30°, 45° Outside Vertical Elbow

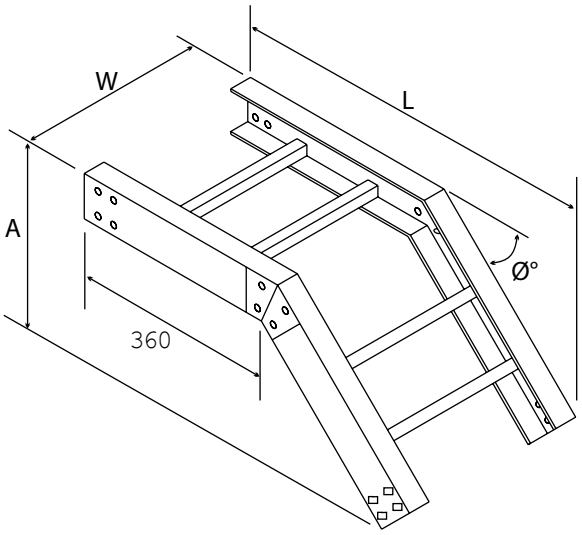

CODE NUMBER	A (mm)	L (mm)
NA-30 OVE-W____	282	723
NB-30 OVE-W____	332	748
NC-30 OVE-W____	332	748
SD-30 OVE-W____	358	761
NA-45 OVE-W____	357	687
NB-45 OVE-W____	407	722
NC-45 OVE-W____	407	722
SD-45 OVE-W____	433	740

* CLASS = NA, NB, NC or SD

Mitered Fittings

90º Inside Vertical Elbow

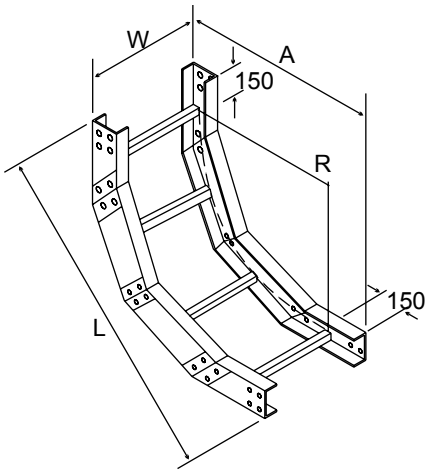

RADIUS (mm)	300		600		900	
CODE NUMBER \ DIMENSION	A (mm)	L (mm)	A (mm)	L (mm)	A (mm)	L (mm)
NA-90 IVE-R____-W_____	482	682	782	1106	1082	1530
NB-90 IVE-R____-W_____	482	682	782	1106	1082	1530
NC-90 IVE-R____-W_____	482	682	782	1106	1082	1530
SD-90 IVE-R____-W_____	482	682	782	1106	1082	1530

60° Inside Vertical Elbow

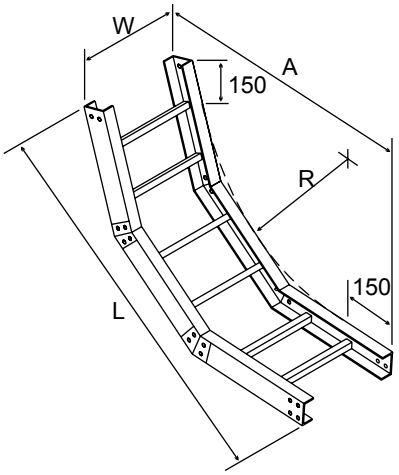

RADIUS (mm)	300		600		900	
CODE NUMBER \ DIMENSION	A (mm)	L (mm)	A (mm)	L (mm)	A (mm)	L (mm)
NA-60 IVE-W_____-R_____	312	513	462	773	612	1032
NB-60 IVE-W_____-R_____	312	513	462	773	612	1032
NC-60 IVE-W_____-R_____	312	513	462	773	612	1032
SD-60 IVE-W_____-R_____	312	513	462	773	612	1032

30°, 45° Inside Vertical Elbow

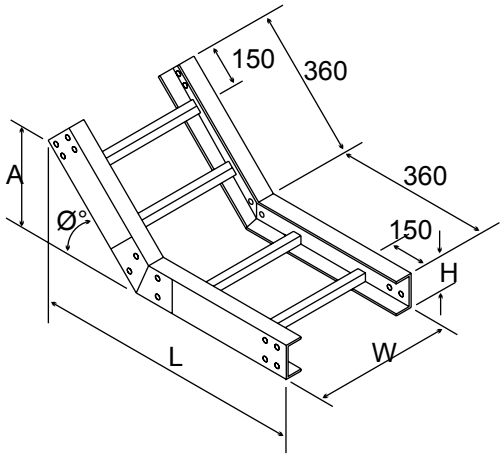

CODE NUMBER	A (mm)	L (mm)
NA-30 IVE-W____	194	723
NB-30 IVE-W____	200	748
NC-30 IVE-W____	200	748
SD-30 IVE-W____	204	761
NA-45 IVE-W____	284	687
NB-45 IVE-W____	299	722
NC-45 IVE-W____	299	722
SD-45 IVE-W____	307	740

Mitered Fittings

Horizontal Tee

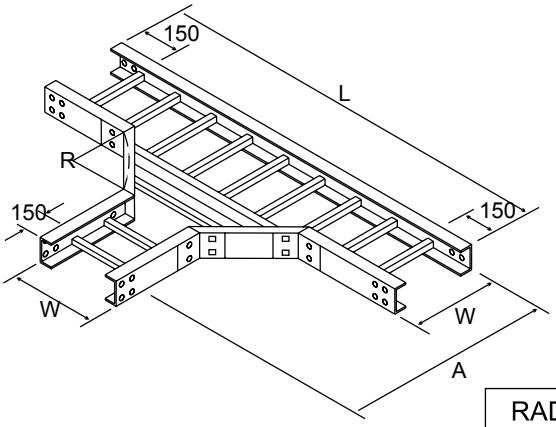

RADIUS, R (mm)	300		600		900	
CODE NUMBER	A (mm)	L (mm)	A (mm)	L (mm)	A (mm)	L (mm)
“CLASS” -HT-R____-W200	860	1520	1160	2120	1460	2720
“CLASS” -HT-R____-W300	960	1620	1260	2220	1560	2820
“CLASS” -HT-R____-W400	1060	1720	1360	2320	1660	2920
“CLASS” -HT-R____-W600	1260	1920	1560	2520	1860	3120
“CLASS” -HT-R____-W800	1460	2120	1760	2720	2060	3320
“CLASS” -HT-R____-W900	1560	2220	1860	2820	2160	3420

Horizontal Cross

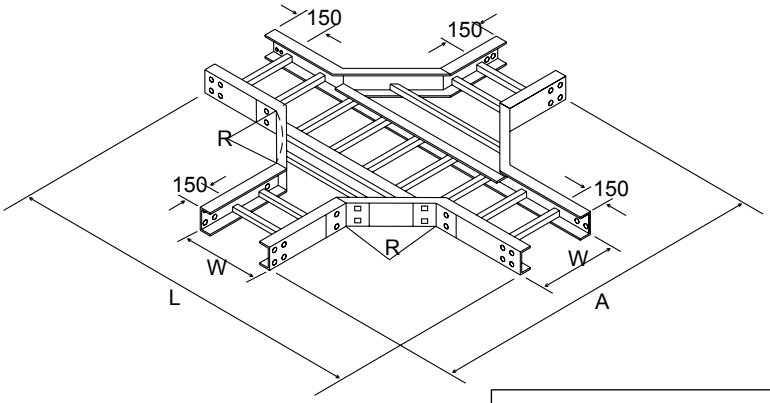

RADIUS, R (mm)	300		600		900	
CODE NUMBER	A (mm)	L (mm)	A (mm)	L (mm)	A (mm)	L (mm)
“CLASS” -HC-R____-W200	1520	1520	2120	2120	2720	2720
“CLASS” -HC-R____-W300	1620	1620	2220	2220	2820	2820
“CLASS” -HC-R____-W400	1720	1720	2320	2320	2920	2920
“CLASS” -HC-R____-W600	1920	1920	2520	2520	3120	3120
“CLASS” -HC-R____-W800	2120	2120	2720	2720	3320	3320
“CLASS” -HC-R____-W900	2220	2220	2820	2820	3420	3420

* CLASS = NA, NB, NC or SD

Mitered Fittings

Straight Reducer

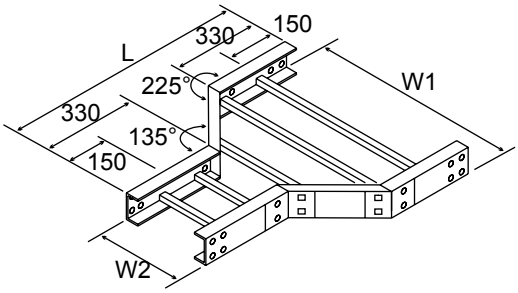

DIMENSION		L (mm)					
CODE NUMBER	W1 / W2	900	800	600	400	300	200
"CLASS" -SR-W1-W2	200	1010	960	860	760	710	
"CLASS" -SR-W1-W2	300	960	910	810	710		
"CLASS" -SR-W1-W2	400	910	860	760			
"CLASS" -SR-W1-W2	600	810	760				
"CLASS" -SR-W1-W2	800	710					
"CLASS" -SR-W1-W2	900						

Left Hand Reducer

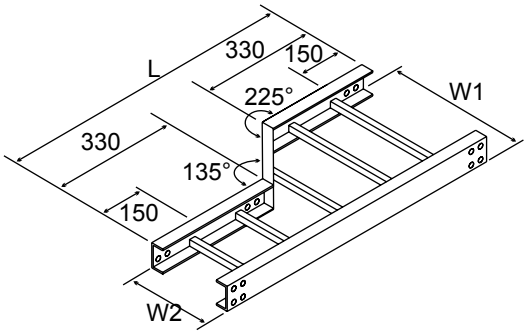

DIMENSION		L (mm)					
CODE NUMBER	W1 / W2	900	800	600	400	300	200
"CLASS" -LHR-W1-W2	200	1360	1260	1060	860	760	
"CLASS" -LHR-W1-W2	300	1260	1160	960	760		
"CLASS" -LHR-W1-W2	400	1160	1060	860			
"CLASS" -LHR-W1-W2	600	960	860				
"CLASS" -LHR-W1-W2	800	760					
"CLASS" -LHR-W1-W2	900						

Right Hand Reducer

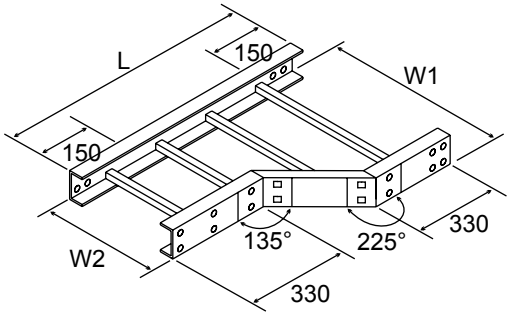

DIMENSION		L (mm)					
CODE NUMBER	W1 / W2	900	800	600	400	300	200
"CLASS" -RHR-W1-W2	200	1360	1260	1060	860	760	
"CLASS" -RHR-W1-W2	300	1260	1160	960	760		
"CLASS" -RHR-W1-W2	400	1160	1060	860			
"CLASS" -RHR-W1-W2	600	960	860				
"CLASS" -RHR-W1-W2	800	760					
"CLASS" -RHR-W1-W2	900						

* CLASS = NA, NB, NC or SD

Splice Plate

Fixed Splice Plate

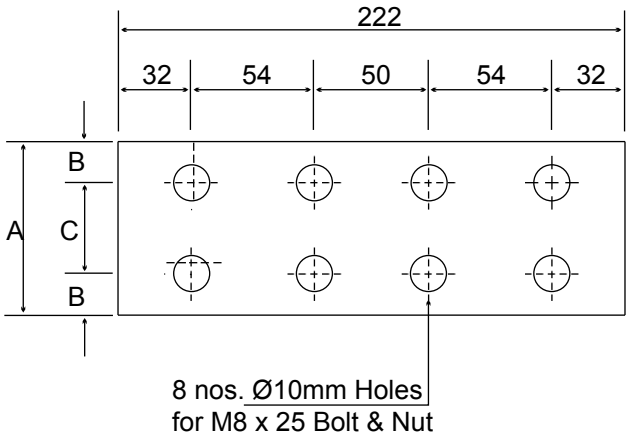

	DIMENSION (mm)		
CODE NUMBER	A	B	C
NA-FSP-102	76	18	40
NB/NC-FSP-152	101	20	61
SD-FSP-178	127	30	67

Expansion Splice Plate

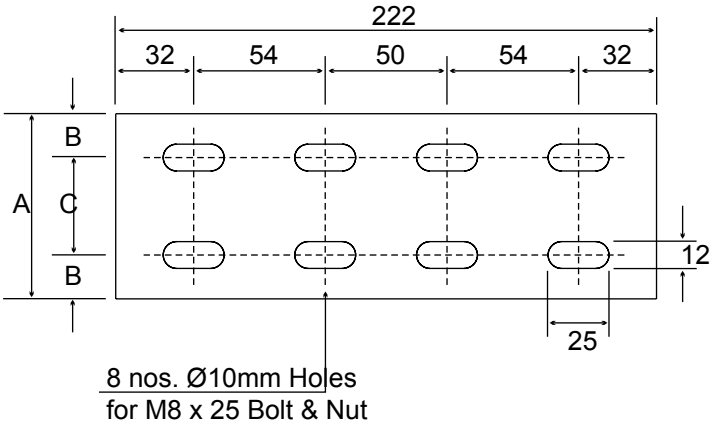

	DIMENSION (mm)		
CODE NUMBER	A	B	C
NA-ESP-102	76	18	40
NB/NC-ESP-152	101	20	61
SD-ESP-178	127	30	67

Horizontal Angle Splice Plate

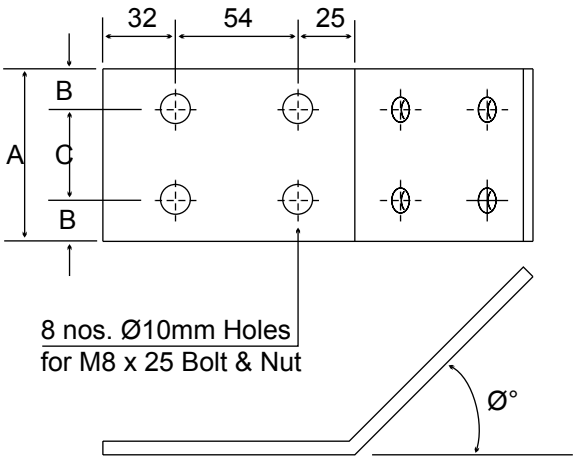

	DIMENSION (mm)		
CODE NUMBER	A	B	C
NA-HASP-Ø°	76	18	40
NB/NC-HASP-Ø°	101	20	61
SD-HASP-Ø°	107	30	67

Splice Plate

Vertical Angle Splice Plate

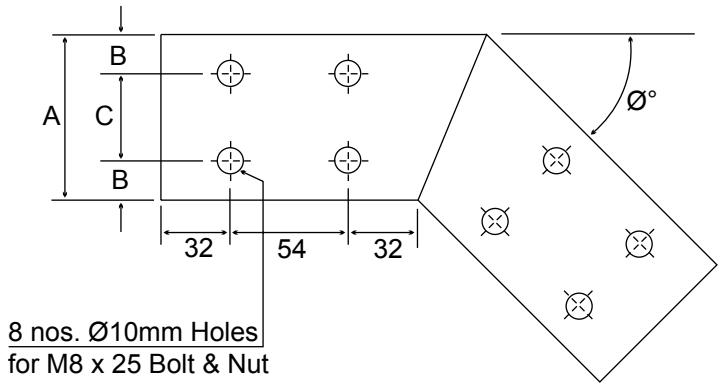

	DIMENSION (mm)		
CODE NUMBER	A	B	C
NA-VASP-Ø°	76	18	40
NB/NC-VASP-Ø°	101	20	61
SD-VASP-Ø°	107	30	67

Adjustable Horizontal Splice Plate (AHSP)

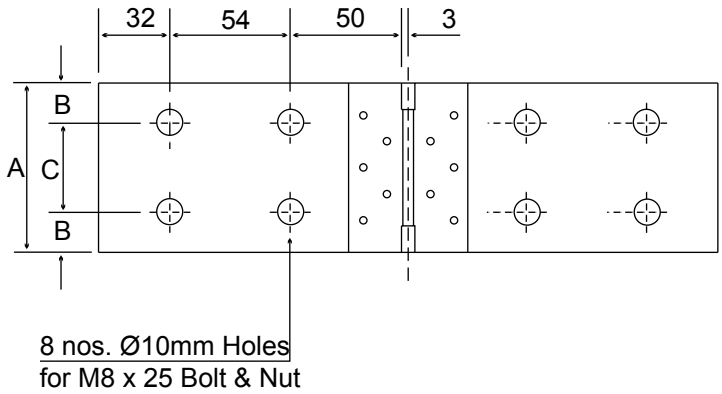

	DIMENSION (mm)		
CODE NUMBER	A	B	C
NA-AHSP-102	76	18	40
NB/NC-AHSP-152	101	20	61
SD-AHSP-178	127	30	67

Adjustable Vertical Splice Plate (AVSP)

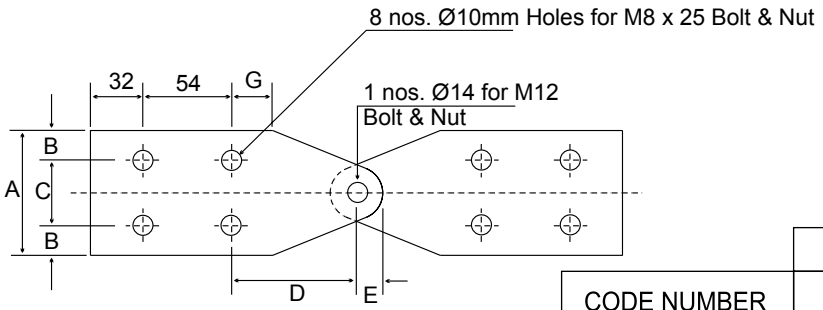

	DIMENSION (mm)					
CODE NUMBER	A	B	C	D	E	G
NA-AVSP-102	76	18	40	75	16	15
NB/NC-AVSP-152	101	20	61	75	16	15
SD-AVSP-178	127	30	67	119	30	25

Splice Plate

Expansion Adjustable Horizontal Splice Plate (EAHSP)

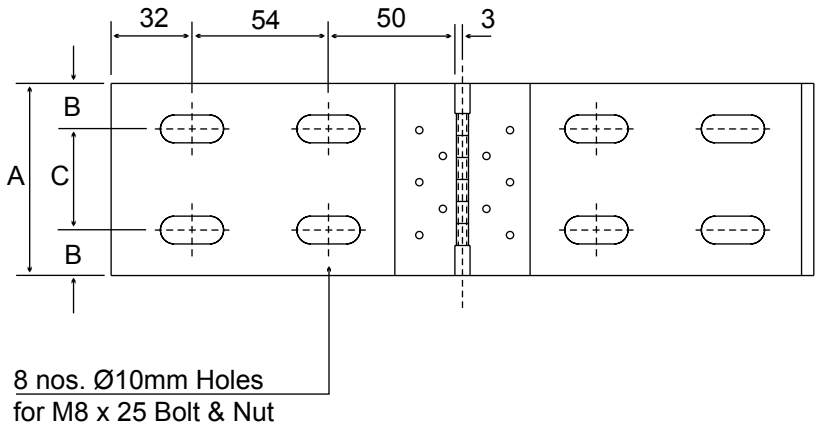

	DIMENSION (mm)		
CODE NUMBER	A	B	C
NA-EAHSP-102	76	18	40
NB/NC-EAHSP-152	101	20	61
SD-EAHSP-178	127	30	67

Expansion Adjustable Vertical Splice Plate (EAVSP)

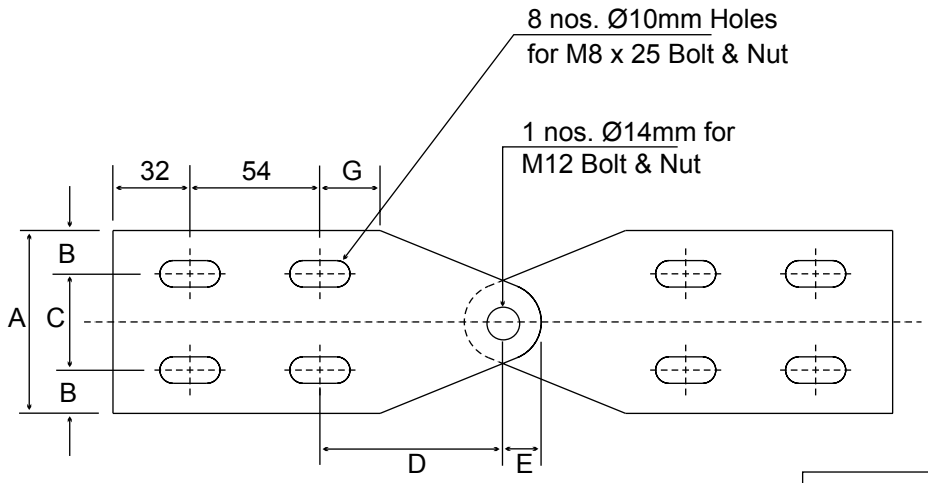

	DIMENSION (mm)					
CODE NUMBER	A	B	C	D	E	G
NA-EAVSP-102	76	18	40	75	16	15
NB/NC-EAVSP-152	101	20	61	75	16	15
SD-EAVSP-178	127	30	67	119	30	25

Note : FRP - 6.4mm thk, SS - 2mm thk.

Clamp

Hold Down Clamp

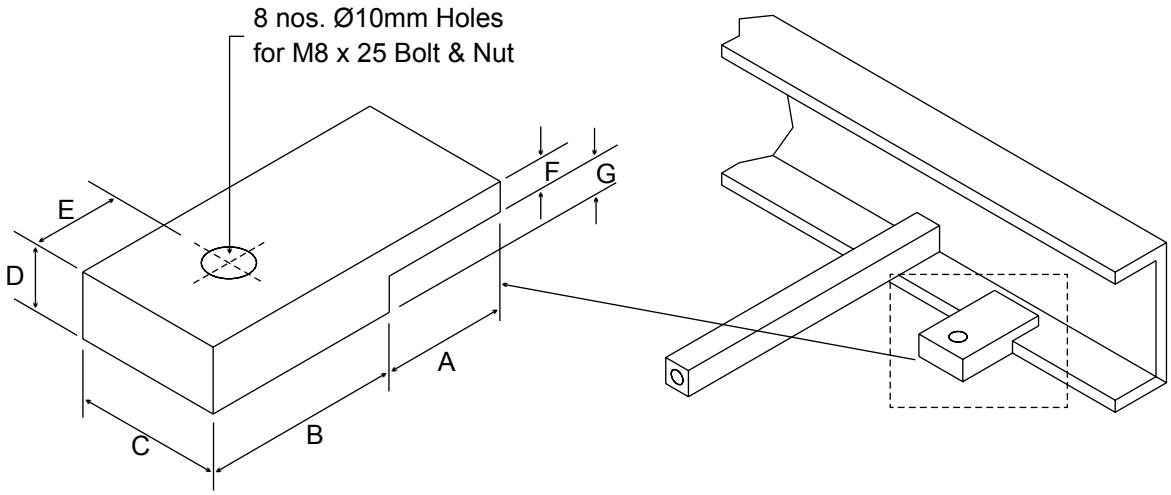

	DIMENSION (mm)						
CODE NUMBER	A	B	C	D	E	F	G
NC/SD-HDC	27	40	38	12.0	23	6	6.0
NA/NB-HDC	27	37	38	10.7	23	6	4.7

Vertical Fixing Clamp

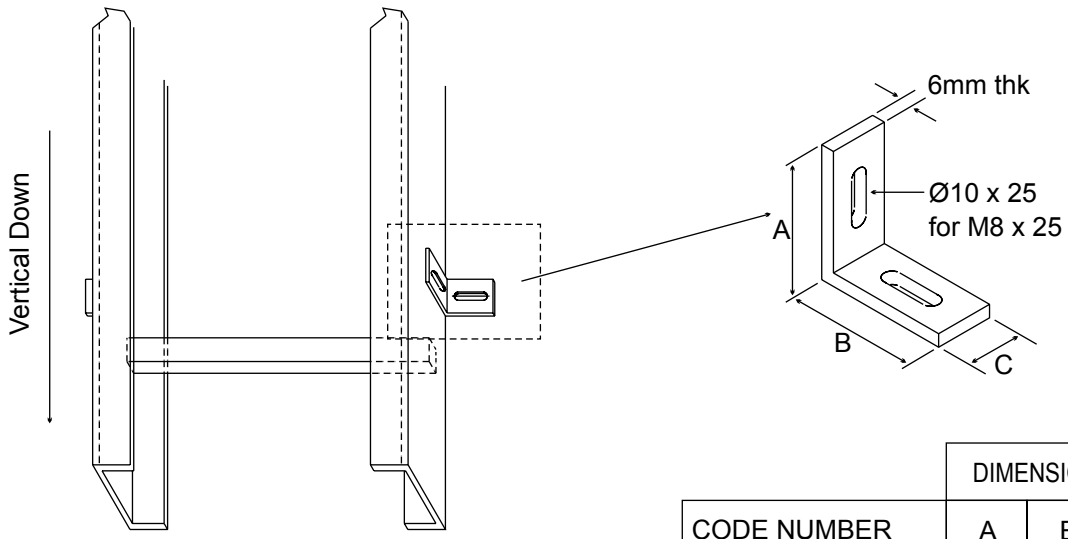

	DIMENSION (mm)		
CODE NUMBER	A	B	C
NA-VFC	50	50	40
NB/NC-VFC	75	75	40
SD-VFC	75	75	40

HEXAGON

Delivering Engineered Solutions Globally.

Distributed By:

HEXAGON COMPOSITE SDN. BHD.
Lot 1903 (A), Jalan KPB7, Kawasan Perindustrian Kampung Baru Balakong, 43300 Seri Kembangan, Selangor, Malaysia.
Tel:+ 603-8961 0037 Fax:+ 603-8962 1011 inquiry_hc@hexagonholdings.com

www.hexagoncomposite.com